2012-2013

Molle a gas
Gas springs
Gasfedern
Vérins de Hayons
Resortes de gas
Molas de gás
Αμορτισέρ μπαγκάζ
Sprężyny gazowe
Газовые Упоры
Gazli amortisör

Indice
Contents
Inhaltsverzeichnis
Sommaire
Indice
Indice
Περιεχομενα
Spis treści
Содержание
İndeks

Indice costruttori
Manufacturers index
Herstellerverzeichnis
Sommaire par marques
Indice constructores
Indice por montadoras
Ευρετηριο κατασκευαστων
Indeks producentów
Индекс изготовителей
Üreticiler
3

Legenda
Legend
Erläuterung
Légende
Leyenda
Legenda
Ευρετηριο
Legenda
Легенда
Gösterge
4

Codice Magneti Marelli
Magneti Marelli Reference
Magneti Marelli Nr.
Référence Magneti Marelli
Código Magneti Marelli
Código Magneti Marelli
Κωδικος Magneti Marelli
Kod Magneti Marelli
Коды Magneti Marelli
Magneti Marelli kodları
7

Applicazione per marca e veicolo
Vehicle application guide
Zuordnung nach Marke und Fahrzeug
Affectations par marques et véhicules
Aplicación por marca y vehículo
Aplicação por marca e veículo
Εφαρμογη ανα μοντελο
Zastosowanie dla marki i pojazdu
Применение по марке и модели
Marka ve otomobile göre uygulama
19

Applicazione per codice
Buyers guide
Zuordnung nach Bestellnummer
Affectations par références
Aplicación por código
Aplicação por código
Εφαρμογες ανα κωδικο
Zastosowanie dla kodu
Применение для кода
Koda göre araç uygulaması
65

Informazione tecnica
Technical information
I`information technique
Technische Information
Información técnica
Informação técnica
Τεχνικές πληροφορίες
Informacja techniczna
Техническая информация
Teknik Bilgi

105

Molle a gas - Tavole di comparazione 1
Gas springs - Cross reference guide 1
Gasfedern - Gegenuberstellung 1
Vérins de Hayons - Table de correspondance 1
Resortes de gas - Tabla de equivalencias 1
Molas de gas - Tabela de equivalencias 1
Αμορτισέρ μπαγκάζ - Πινακας αντιστοιχιων 1
Sprężyny gazowe - Tabela porównawcza 1
Газовые упоры - Таблица переходов 1
Gazlı amortisörler - Çapraz referans tablosu 1

O.E.

117

Molle a gas - Tavole di comparazione 2
Gas springs - Cross reference guide 2
Gasfedern - Gegenuberstellung 2
Vérins de Hayons - Table de correspondance 2
Resortes de gas - Tabla de equivalencias 2
Molas de gas - Tabela de equivalencias 2
Αμορτισέρ μπαγκάζ - Πινακας αντιστοιχιων 2
Sprężyny gazowe - Tabela porównawcza 2
Газовые упоры - Таблица переходов 2
Gazlı amortisörler - Çapraz referans tablosu 2

I.A.M.

145

Costruttore e modello
Make and model
Hersteller und Modell
Modèle
Constructor y modelo
Montadora e modelo
Μαρκα και οντελο
Producent i model
Сделано и смоделировано
Üretici ve model

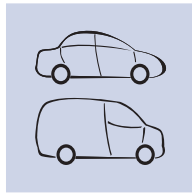

Anno di produzione
Manufacturing year
Baujahr
Date de fabrication
Año de fabricación
Ano de fabricaçao
Ετος παραγωγης
Rok produkcji
Год изготовления
Üretim yılı

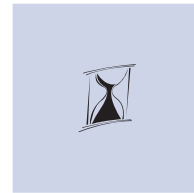

Codice Magneti Marelli
Magneti Marelli Reference
Magneti Marelli Nr.
Référence Magneti Marelli
Código Magneti Marelli
Código Magneti Marelli
Κωδικος Magneti Marelli
Kod Magneti Marelli
Коды Magneti Marelli
Magneti Marelli kodları

MAGNETI MARELLI

Codice costruttore
O.E. Reference
Herstellernummer
Référence origine
Código constructor
Código montadora
Κωδικος κατασκευαστη
Kod O.E.
Оригинальные коды
Üretici kodu

O.E.

Indice costruttori
Manufacturers index
Herstellerverzeichnis
Sommaire par marques
Indice constructores
Indice por montadoras
Ευρετηριο κατασκευαστων
Indeks producentów
Индекс изготовителей
Üreticiler

ALFA ROMEO 25
AUDI 25
AUSTIN 28
AUTOBIANCHI 28
BMW 28
CHEVROLET 30
CHRYSLER 30
CITROEN 30
DAEWOO 32
DAEWOO FSC Lublin 33
DAEWOO FSO 33
DAIHATSU 33
FIAT 33
FORD 36
HONDA 39
INNOCENTI 41
IŻ 41
JEEP 41
KIA 41
LADA 42
LANCIA 43
LAND ROVER 43
LEXUS 43
MAZDA 43
MERCEDES-BENZ 45
MG 46
MINI 46
MITSUBISHI 46
MOSKWICZ 47
NISSAN 47
OPEL 48
PAZ (ПАЗ) 50
PEUGEOT 50
PORSCHE 52
RENAULT 52
ROVER 54
SAAB 56
SEAT 57
SKODA 59
SMART 59
SSANGYONG 59
SUBARU 59
SUZUKI 59
TOYOTA 60
TWEKS (ТВЭКС) 60
UAZ 60
VAUXHALL 60
VOLVO 63
VW 64
ZASTAVA 67
ZAZ 67

Legenda Legend Erläuterung Légende Leyenda Legenda Ευρετηριο Legenda Легенда Semboller

Klapa bagażnika - Hatchback *Tailgate - Hatchback*		*Kofferraumklappe-Hatchback* *Крышка багажника*
Klapa bagażnika ze spoilerem - Hatchback *Tailgate with spoiler - Hatchback*		*Kofferraumklappe mit Spoiler-Hatchback* *Крышка багажника со спойлером - Hatchback*
Maska silnika - Hatchback *Engine hood - Hatchback*		*Motorhaube - Hatchback* *Крышка капота - Hatchback*
Klapa bagażnika - Sedan *Tailgate - Sedan*		*Kofferraumklappe-Sedan* *Крышка багажника - Sedan*
Klapa bagażnika ze spoilerem - Sedan *Tailgate with spoiler - Sedan*		*KofferraumklappemitSpoiler-Sedan* *Крышка багажника со спойлером - Sedan*
Maska silnika - Sedan *Engine hood - Sedan*		*Motorhaube - Sedan* *Крышка капота - Sedan*
Klapa bagażnika - Liftback *Tailgate - Liftback*		*Kofferraumklappe-Liftback* *Крышка багажника - Liftback*
Klapa bagażnika - Kombi *Tailgate - Combi*		*Kofferraumklappe-Kombi* *Крышка багажника - Combi*
Klapa bagażnika ze spoilerem - Kombi *Tailgate with spoiler - Combi*		*Kofferraumklappe mit Spoiler-Kombi* *Крышка багажника со спойлером - Combi*
Maska silnika - Kombi *Engine hood - Combi*		*Motorhaube - Kombi* *Крышка капота - Combi*
Klapa bagażnika - Kabriolet/ Roadster *Tailgate - Cabrio/ Roadster*		*Kofferraumklappe-Kabriolett/ Roadster* *Крышка багажника - Cabrio/ Roadster*
Klapa bagażnika ze spoilerem - Kabriolet/ Roadster *Tailgate with spoiler - Cabrio/ Roadster*		*Kofferraumklappe mit Spoiler-Kabriolett/ Roadster* *Крышка багажника со спойлером - Cabrio/ Roadster*
Maska silnika - Kabriolet/ Roadster *Engine hood - Cabrio/ Roadster*		*Motorhaube - Kabriolett/ Roadster* *Крышка капота - Cabrio/ Roadster*
Klapa bagażnika - Coupe *Tailgate - Coupe*		*Kofferraumklappe-Coupe* *Крышка багажника - Coupe*
Maska silnika - Coupe *Engine hood - Coupe*		*Motorhaube - Coupe* *Крышка капота - Coupe*
Klapa bagażnika - Samochód terenowy *Tailgate - SUV*		*Kofferraumklappe-Geländewagen* *Крышка багажника - Внедорожник*
Maska silnika - Samochód terenowy *Engine hood - SUV*		*Motorhaube - Geländewagen* *Крышка капота - Внедорожник*
Klapa przedziału bagażowego *Luggage compartment tailgate - Additional storey*		*Gepäckabteilklappe* *Крышка багажного отделения*
Klapa bagażnika - Pick-up *Tailgate - Pick-up*		*Kofferraumklappe-PickUp* *Крышка багажника - Pick-up*
Klapa bagażnika - Van / Minivan *Tailgate - Van / Minivan*		*Kofferraumklappe - Van / Minivan* *Крышка багажника - Van / Minivan*
Maska silnika - Van / Minivan *Engine hood - Van / Minivan*		*Motorhaube - Van / Minivan* *Капот двигателя - Van / Minivan*
Maska silnika - Autobus *Engine hood - Bus*		*Motorhaube - Buss* *Крышка капота - Автобус*
3 drzwiowy *3 doors*	3	*mit drei Türen* *3-х дверный*
5 drzwiowy *5 doors*	5	*mit fünf Türen* *5-и дверный*
z wycieraczką *With wiper*		*mit Scheibenwischer* *со стеклоочистителем*
bez wycieraczki *Without wiper*		*ohne Scheibenwischer* *без стеклоочистителя*

I

Magneti Marelli After Market Parts and Services S.p.A. ha curato con particolare attenzione la stesura del presente catalogo; declina comunque ogni responsabilità per eventuali errori od omissioni relativi a schemi, disegni, corrispondenze con i codici O.E. ecc. e si riserva il diritto di apportare modifiche al contenuto senza l'obbligo di darne preventiva comunicazione. Sono particolarmente graditi, da parte degli utenti, commenti, segnalazioni di inesattezze e qualsiasi altro suggerimento atto a rendere più efficace la prossima edizione del catalogo.

GB

Magneti Marelli After Market Parts and Services S.p.A. has devoted its best attention to the editing of this catalogue; it nevertheless declines any responsibility for possible mistakes or omissions regarding figures, drawings, correspondence with O.E. codes etc. and it reserves the right to modify the contents without prior notice. Users' comments, reports of inaccuracies or any other suggestions which may in any way improve the next edition of this catalogue are warmly welcomed.

D

Magneti Marelli After Market Parts and Services S.p.A. hat diesen Katalog sorgfältig verfasst. Die Firma enthebt sich jeglicher Verantwortung für eventuelle Fehler oder Auslassung hinsichtlich Schemen, Zeichnungen, Übereinstimmungen mit O.E. Codes usw. und behält sich das Recht vor, ohne Ankündigung, am Inhalt Veränderungen vorzunehmen. Anmerkungen, Fehlerhinweise und weitere Anregungen werden gerne entgegengenommen, um die nächste Ausgabe des Katalogs effizienter zu gestalten.

F

Magneti Marelli After Market Parts and Services S.p.A. a soigné avec une attention particulière la rédaction de ce catalogue; elle décline cependant toute responsabilité pour toute erreur ou omission éventuelle dans les schémas, les dessins, les correspondances avec les codes O.E., etc. et se réserve le droit d'en modifier le contenu sans obligation de communication préalable. Les commentaires, les signalisations d'inexactitudes et toute autre suggestion des utilisateurs susceptibles de rendre la prochaine rédaction du catalogue plus efficace seront particulièrement appréciés.

E

Magneti Marelli After Market Parts and Services S.p.A. ha cuidado con especial atención la redacción del presente catálogo; de todas maneras declina toda responsabilidad por eventuales errores u omisiones relativos a esquemas, diseños, correspondencia con los códigos O.E., etc., y se reserva el derecho de aportar modificaciones al contenido sin la obligación de previo aviso. Se agradecen especialmente los comentarios, las indicaciones al contenido sin la obligación de previo aviso. Se agradecen especialmente los comentarios, las indicaciones de inexactitudes y cualquier otra sugerencia por parte de los usuarios que sean útiles para hacer más eficaz la próxima edición del catálogo.

P

A Magneti Marelli After Market Parts and Services S.p.A. cuidou com particular atenção a redação do presente catálogo; como quer que seja, rejeita qualquer responsabilidade face a eventuais erros o omissões relacionados aos esquemas, desenhos, correspondências aos códigos O.E. etc. e reserva-se o direito de introduzir alterações ao seu conteúdo sem a obrigação de comunicação prévia das mesmas. São particularmente bem aceitos, comentários, sinalizações de inexatidões e qualquer outra sugestão idônea a tornar mais eficaz a próxima edição do catálogo.

G

Η Magneti Marelli After Market Parts and Services S.p.A. φροντισε με καθε λεπτομερεια την ορθοτητα των στοιχειων αυτου του καταλογου, δεν φερει ομως καμια ευθυνη για τυχον λαθη ή παραληψεις που σχετιζονται με σχηματα, σχεδια, αντιστοιχιες με γνησια νουμερα κτλ. και επιφυλασσεται του δικαιωματος να αλλαξει το περιεχομενο του καταλογου οποιαδηποτε στιγμη χωρις προτερη ενημερωση. Οποιαδηποτε σχολια η παρατηρησεις, με στοχο την βελτιωση του καταλογου, ειναι ευπροσδεκτα.

PL

Firma Magneti Marelli After Market Parts and Services S.p.A dołożyła szczególnych starań przy opracowywaniu niniejszego katalogu. Nie ponosi ona jednak żadnej odpowiedzialności za ewentualne błędy lub braki dotyczące schematów, rysunków, rysunki, zgodności z kodami O.E., itp. Firma Magneti Marelli After Market Parts and Services S.p.A zastrzega sobie prawo do wprowadzania zmian bez obowiązku uprzedniego powiadamiania o tym. Szczególnie mile widziane są komentarze i sygnały dotyczące nieprawidłowości oraz jakiekolwiek inne sugestie zgłaszane przez klientów, mające na celu udoskonalenie następnych edycji katalogu.

R

Magneti Marelli After Market Parts and Services S.p.A. уделило много времени и внимания редактированию этого каталога; Magneti Marelli After Market Parts and Services S.p.A. не несёт ответственности за возможные ошибки или упущения относительно фигур, рисунков, сочетания с кодами O.E. и т.д. и резервирует право изменить содержание без предшествующего уведомления. Комментарии пользователей, сообщения погрешностей или любые другие предложения, которые, возможно, никогда не улучшают следующий выпуск этого каталога, тепло приветствуются.

T

Magneti Marelli After Market Parts and Services S.p.A., mevcut katalogdaki yazıyı çok özenli bir şekilde hazırlamıştır; O.E. vs. şifrelerine karşılık gelen her türlü model ve tasarım ile ilgili olası eksiklikler ve hatalar ile ilgili sorumluluğunun altını çizer ve öncesinde haber verme zorunluluğu olmaksızın değişiklik yapma hakkını saklı tutar. Kullanıcı tarafından yorumların, eksikliklerin ve her türlü önerilerin belirtilmesi, bir sonraki katalog baskısını daha etkili hale getirecektir.

I

È vietata la riproduzione, anche parziale, del contenuto del presente catalogo senza preventiva autorizzazione scritta della Magneti Marelli After Market Parts and Services S.p.A., che tutelerà i propri diritti a termine di legge.

GB

It is forbidden to reproduce, even partially, the contents of this catalogue without prior written consent from Magneti Marelli After Market Parts and Services S.p.A., who will protect its rights in accordance with the law.

D

Die Vervielfältigung, auch teilweise, des urheberrechtlich geschützten Inhalts des vorliegenden Katalogs ist ohne schriftliche Genehmigung durch Magneti Marelli After Market Parts and Services S.p.A. untersagt.

F

Il est interdit de reproduire même partiellement le contenu de ce catalogue sans autorisation écrite préalable de Magneti Marelli After Market Parts and Services S.p.A., qui protégera ses droits selon les termes de la loi.

E

Está prohibida la reproducción, total o parcial, del contenido del presente catálogo sin previa autorización escrita de Magneti Marelli After Market Parts and Services S.p.A., que protegerá sus propios derechos con arreglo a la ley.

P

É proibida a reprodução, também parcial, do conteúdo do presente catálogo sem a prévia autorização escrita de Magneti Marelli After Market Parts and Services S.p.A., que defenderá os próprios direitos, nos termos de lei.

G

Απαγορευται η αναπαραγωγη, ολικη η μερικη,του περιεχομενου του παροντος καταλογου χωρις την γραπτη εξουσιοδοτηση της Magneti Marelli After Market Parts and Services S.p.A.

PL

Zabroniona jest nawet częściowa reprodukcja zawartości katalogu bez uprzedniej pisemnej autoryzacji ze strony firmy Magneti Marelli After Market Parts and Services S.p.A., która chroni swą własność zgodnie z przepisami prawa.

R

Запрещяется воспроизводить, даже частично, содержание этого каталога без предварительного письменного согласия от Magneti Marelli After Market Parts and Services S.p.A., которая будет защищать свои права в соответствии с законом.

T

Tüm yasal hakların sahibi olan Magneti Marelli After Market Parts and Services S.p.A. 'in yazılı izni olmaksızın mevcut kataloğun kısmen de olsa çoğaltılması yasaktır.

La corrispondenza dovrà essere inviata a:
Correspondence should be sent to:
Der Briefverkehr ist zu senden an:
Envoyer la correspondance à:
La correspondencia debe ser enviada a:
La correspondência deverá ser enviada a:
Η αλληλογραφια θα πρεπει να αποστελεται:
Korespondencję należy przesyłać na adres:
Соответствующую корреспонденцию просим присылать по адресу:
Ticari yazışmalar şu adrese gönderilmelidir:

Magneti Marelli Aftermarket Sp. z o.o.
ul. Plac pod Lipami 5
40-476 Katowice
Tel. +48/32/6036107 • Fax +48/32/6036108
e-mail: ricambi@magnetimarelli.com

www.magnetimarelli-checkstar.pl

Codice Magneti Marelli
Magneti Marelli Reference
Magneti Marelli Nr.
Référence Magneti Marelli
Código Magneti Marelli
Código Magneti Marelli
Κωδικος Magneti Marelli
Kod Magneti Marelli
Коды Magneti Marelli
Magneti Marelli kodları

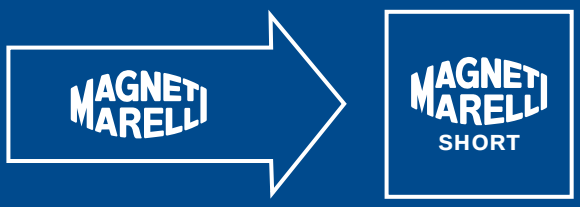

CODE	SHORT	CODE	SHORT	CODE	SHORT
430719000100	GS0001	430719004500	GS0045	430719009000	GS0090
430719000200	GS0002	430719004600	GS0046	430719009100	GS0091
430719000300	GS0003	430719004800	GS0048	430719009200	GS0092
430719000400	GS0004	430719004900	GS0049	430719009300	GS0093
430719000500	GS0005	430719005000	GS0050	430719009400	GS0094
430719000600	GS0006	430719005100	GS0051	430719009500	GS0095
430719000700	GS0007	430719005200	GS0052	430719009600	GS0096
430719000800	GS0008	430719005300	GS0053	430719009700	GS0097
430719000900	GS0009	430719005400	GS0054	430719009800	GS0098
430719001000	GS0010	430719005500	GS0055	430719009900	GS0099
430719001100	GS0011	430719005600	GS0056	430719010000	GS0100
430719001200	GS0012	430719005700	GS0057	430719010100	GS0101
430719001300	GS0013	430719005800	GS0058	430719010200	GS0102
430719001400	GS0014	430719005900	GS0059	430719010300	GS0103
430719001500	GS0015	430719006000	GS0060	430719010400	GS0104
430719001600	GS0016	430719006100	GS0061	430719010500	GS0105
430719001700	GS0017	430719006200	GS0062	430719010600	GS0106
430719001800	GS0018	430719006300	GS0063	430719010700	GS0107
430719001900	GS0019	430719006400	GS0064	430719010800	GS0108
430719002000	GS0020	430719006500	GS0065	430719010900	GS0109
430719002100	GS0021	430719006600	GS0066	430719011000	GS0110
430719002200	GS0022	430719006700	GS0067	430719011100	GS0111
430719002300	GS0023	430719006800	GS0068	430719011200	GS0112
430719002400	GS0024	430719006900	GS0069	430719011400	GS0114
430719002500	GS0025	430719007000	GS0070	430719011500	GS0115
430719002600	GS0026	430719007100	GS0071	430719011600	GS0116
430719002700	GS0027	430719007200	GS0072	430719011700	GS0117
430719002800	GS0028	430719007300	GS0073	430719011800	GS0118
430719002900	GS0029	430719007400	GS0074	430719011900	GS0119
430719003000	GS0030	430719007500	GS0075	430719012000	GS0120
430719003100	GS0031	430719007600	GS0076	430719012100	GS0121
430719003200	GS0032	430719007700	GS0077	430719012200	GS0122
430719003300	GS0033	430719007800	GS0078	430719012300	GS0123
430719003400	GS0034	430719007900	GS0079	430719012400	GS0124
430719003500	GS0035	430719008000	GS0080	430719012500	GS0125
430719003600	GS0036	430719008100	GS0081	430719012600	GS0126
430719003700	GS0037	430719008200	GS0082	430719012700	GS0127
430719003800	GS0038	430719008300	GS0083	430719012800	GS0128
430719003900	GS0039	430719008400	GS0084	430719012900	GS0129
430719004000	GS0040	430719008500	GS0085	430719013000	GS0130
430719004100	GS0041	430719008600	GS0086	430719013100	GS0131
430719004200	GS0042	430719008700	GS0087	430719013200	GS0132
430719004300	GS0043	430719008800	GS0088	430719013300	GS0133
430719004400	GS0044	430719008900	GS0089	430719013400	GS0134

CODE	SHORT
430719013500	GS0135
430719013600	GS0136
430719013700	GS0137
430719013800	GS0138
430719013900	GS0139
430719014000	GS0140
430719014100	GS0141
430719014200	GS0142
430719014300	GS0143
430719014400	GS0144
430719014500	GS0145
430719014600	GS0146
430719014700	GS0147
430719014800	GS0148
430719014900	GS0149
430719015000	GS0150
430719015100	GS0151
430719015200	GS0152
430719015300	GS0153
430719015400	GS0154
430719015500	GS0155
430719015600	GS0156
430719015700	GS0157
430719015800	GS0158
430719015900	GS0159
430719016000	GS0160
430719016100	GS0161
430719016200	GS0162
430719016300	GS0163
430719016400	GS0164
430719016500	GS0165
430719016600	GS0166
430719016700	GS0167
430719016800	GS0168
430719016900	GS0169
430719017000	GS0170
430719017100	GS0171
430719017200	GS0172
430719017300	GS0173
430719017400	GS0174
430719017500	GS0175
430719017600	GS0176
430719017700	GS0177
430719017800	GS0178

CODE	SHORT
430719017900	GS0179
430719018000	GS0180
430719018100	GS0181
430719018200	GS0182
430719018300	GS0183
430719018400	GS0184
430719018500	GS0185
430719018600	GS0186
430719018700	GS0187
430719018800	GS0188
430719018900	GS0189
430719019000	GS0190
430719019100	GS0191
430719019200	GS0192
430719019300	GS0193
430719019400	GS0194
430719019500	GS0195
430719019600	GS0196
430719019700	GS0197
430719019800	GS0198
430719019900	GS0199
430719020000	GS0200
430719020100	GS0201
430719020200	GS0202
430719020300	GS0203
430719020400	GS0204
430719020500	GS0205
430719020600	GS0206
430719020700	GS0207
430719020800	GS0208
430719020900	GS0209
430719021000	GS0210
430719021100	GS0211
430719021200	GS0212
430719021300	GS0213
430719021400	GS0214
430719021500	GS0215
430719021600	GS0216
430719021700	GS0217
430719021800	GS0218
430719021900	GS0219
430719022000	GS0220
430719022100	GS0221
430719022200	GS0222

CODE	SHORT
430719022300	GS0223
430719022400	GS0224
430719022500	GS0225
430719022600	GS0226
430719022700	GS0227
430719022800	GS0228
430719022900	GS0229
430719023000	GS0230
430719023100	GS0231
430719023200	GS0232
430719023300	GS0233
430719023400	GS0234
430719023500	GS0235
430719023600	GS0236
430719023700	GS0237
430719023800	GS0238
430719023900	GS0239
430719024000	GS0240
430719024100	GS0241
430719024200	GS0242
430719024300	GS0243
430719024400	GS0244
430719024500	GS0245
430719024600	GS0246
430719024700	GS0247
430719024800	GS0248
430719024900	GS0249
430719025000	GS0250
430719025100	GS0251
430719025200	GS0252
430719025300	GS0253
430719025400	GS0254
430719025500	GS0255
430719025600	GS0256
430719025700	GS0257
430719025800	GS0258
430719025900	GS0259
430719026000	GS0260
430719026100	GS0261
430719026200	GS0262
430719026300	GS0263
430719026400	GS0264
430719026500	GS0265
430719026600	GS0266

CODE	SHORT
430719026700	GS0267
430719026800	GS0268
430719026900	GS0269
430719027000	GS0270
430719027100	GS0271
430719027200	GS0272
430719027300	GS0273
430719027400	GS0274
430719027500	GS0275
430719027600	GS0276
430719027700	GS0277
430719027800	GS0278
430719027900	GS0279
430719028000	GS0280
430719028100	GS0281
430719028200	GS0282
430719028300	GS0283
430719028400	GS0284
430719028500	GS0285
430719028600	GS0286
430719028700	GS0287
430719028800	GS0288
430719028900	GS0289
430719029000	GS0290
430719029100	GS0291
430719029200	GS0292
430719029300	GS0293
430719029400	GS0294
430719029500	GS0295
430719029600	GS0296
430719029700	GS0297
430719029800	GS0298
430719029900	GS0299
430719030000	GS0300
430719030100	GS0301
430719030200	GS0302
430719030300	GS0303
430719030400	GS0304
430719030500	GS0305
430719030600	GS0306
430719030700	GS0307
430719030800	GS0308
430719030900	GS0309
430719031000	GS0310

CODE	SHORT
430719031100	GS0311
430719031200	GS0312
430719031300	GS0313
430719031400	GS0314
430719031500	GS0315
430719031600	GS0316
430719031700	GS0317
430719031800	GS0318
430719031900	GS0319
430719032000	GS0320
430719032100	GS0321
430719032200	GS0322
430719032300	GS0323
430719032400	GS0324
430719032500	GS0325
430719032600	GS0326
430719032700	GS0327
430719032800	GS0328
430719032900	GS0329
430719033000	GS0330
430719033100	GS0331
430719033200	GS0332
430719033300	GS0333
430719033400	GS0334
430719033500	GS0335
430719033600	GS0336
430719033700	GS0337
430719033800	GS0338
430719033900	GS0339
430719034000	GS0340
430719034100	GS0341
430719034200	GS0342
430719034300	GS0343
430719034400	GS0344
430719034500	GS0345
430719034600	GS0346
430719034700	GS0347
430719034800	GS0348
430719034900	GS0349
430719035000	GS0350
430719035100	GS0351
430719035200	GS0352
430719035300	GS0353
430719035400	GS0354

CODE	SHORT
430719035500	GS0355
430719035600	GS0356
430719035700	GS0357
430719035800	GS0358
430719035900	GS0359
430719036000	GS0360
430719036100	GS0361
430719036200	GS0362
430719036300	GS0363
430719036400	GS0364
430719036500	GS0365
430719036600	GS0366
430719036700	GS0367
430719036800	GS0368
430719036900	GS0369
430719037000	GS0370
430719037100	GS0371
430719037200	GS0372
430719037300	GS0373
430719037400	GS0374
430719037500	GS0375
430719037600	GS0376
430719037700	GS0377
430719037800	GS0378
430719037900	GS0379
430719038000	GS0380
430719038100	GS0381
430719038200	GS0382
430719038300	GS0383
430719038400	GS0384
430719038500	GS0385
430719038600	GS0386
430719038700	GS0387
430719038800	GS0388
430719038900	GS0389
430719039000	GS0390
430719039100	GS0391
430719039200	GS0392
430719039300	GS0393
430719039400	GS0394
430719039500	GS0395
430719039600	GS0396
430719039800	GS0398
430719039900	GS0399

CODE	SHORT
430719040000	GS0400
430719040100	GS0401
430719040200	GS0402
430719040300	GS0403
430719040400	GS0404
430719040500	GS0405
430719040600	GS0406
430719040700	GS0407
430719040800	GS0408
430719040900	GS0409
430719041000	GS0410
430719041100	GS0411
430719041200	GS0412
430719041300	GS0413
430719041400	GS0414
430719041500	GS0415
430719041600	GS0416
430719041700	GS0417
430719041800	GS0418
430719041900	GS0419
430719042000	GS0420
430719042100	GS0421
430719042200	GS0422
430719042300	GS0423
430719042400	GS0424
430719042500	GS0425
430719042600	GS0426
430719042700	GS0427
430719042800	GS0428
430719042900	GS0429
430719043000	GS0430
430719043200	GS0432
430719043300	GS0433
430719043400	GS0434
430719043500	GS0435
430719043600	GS0436
430719043700	GS0437
430719043800	GS0438
430719043900	GS0439
430719044000	GS0440
430719044100	GS0441
430719044200	GS0442
430719044300	GS0443
430719044400	GS0444

CODE	SHORT
430719044500	GS0445
430719044600	GS0446
430719044700	GS0447
430719044800	GS0448
430719044900	GS0449
430719045000	GS0450
430719045100	GS0451
430719045200	GS0452
430719045300	GS0453
430719045400	GS0454
430719045500	GS0455
430719045600	GS0456
430719045700	GS0457
430719045800	GS0458
430719045900	GS0459
430719046000	GS0460
430719046100	GS0461
430719046200	GS0462
430719046300	GS0463
430719046400	GS0464
430719046500	GS0465
430719046600	GS0466
430719046700	GS0467
430719046800	GS0468
430719046900	GS0469
430719047000	GS0470
430719047100	GS0471
430719047200	GS0472
430719047300	GS0473
430719047400	GS0474
430719047500	GS0475
430719047600	GS0476
430719047700	GS0477
430719047800	GS0478
430719047900	GS0479
430719048000	GS0480
430719048100	GS0481
430719048200	GS0482
430719048300	GS0483
430719048400	GS0484
430719048500	GS0485
430719048600	GS0486
430719048700	GS0487
430719048800	GS0488

CODE	SHORT
430719048900	GS0489
430719049000	GS0490
430719049100	GS0491
430719049200	GS0492
430719049300	GS0493
430719049400	GS0494
430719049500	GS0495
430719049600	GS0496
430719049700	GS0497
430719049800	GS0498
430719049900	GS0499
430719050000	GS0500
430719050100	GS0501
430719050200	GS0502
430719050300	GS0503
430719050400	GS0504
430719050500	GS0505
430719050600	GS0506
430719050700	GS0507
430719050800	GS0508
430719050900	GS0509
430719051000	GS0510
430719051100	GS0511
430719051200	GS0512
430719051300	GS0513
430719051400	GS0514
430719051500	GS0515
430719051600	GS0516
430719051700	GS0517
430719051800	GS0518
430719051900	GS0519
430719052000	GS0520
430719052100	GS0521
430719052200	GS0522
430719052300	GS0523
430719052400	GS0524
430719052500	GS0525
430719052600	GS0526
430719052700	GS0527
430719052800	GS0528
430719052900	GS0529
430719053000	GS0530
430719053100	GS0531
430719053200	GS0532

CODE	SHORT
430719053300	GS0533
430719053400	GS0534
430719053500	GS0535
430719053600	GS0536
430719053700	GS0537
430719053800	GS0538
430719053900	GS0539
430719054000	GS0540
430719054100	GS0541
430719054200	GS0542
430719054300	GS0543
430719054400	GS0544
430719054500	GS0545
430719054600	GS0546
430719054700	GS0547
430719054800	GS0548
430719054900	GS0549
430719055000	GS0550
430719055100	GS0551
430719055200	GS0552
430719055300	GS0553
430719055400	GS0554
430719055500	GS0555
430719055600	GS0556
430719055700	GS0557
430719055800	GS0558
430719055900	GS0559
430719056000	GS0560
430719056100	GS0561
430719056200	GS0562
430719056300	GS0563
430719056400	GS0564
430719056500	GS0565
430719056600	GS0566
430719056700	GS0567
430719056800	GS0568
430719056900	GS0569
430719057000	GS0570
430719057100	GS0571
430719057200	GS0572
430719057300	GS0573
430719057400	GS0574
430719057500	GS0575
430719057600	GS0576

CODE	SHORT
430719057700	GS0577
430719057800	GS0578
430719057900	GS0579
430719058000	GS0580
430719058100	GS0581
430719058300	GS0583
430719058400	GS0584
430719058500	GS0585
430719058600	GS0586
430719058700	GS0587
430719058800	GS0588
430719058900	GS0589
430719059000	GS0590
430719059100	GS0591
430719059200	GS0592
430719059300	GS0593
430719059400	GS0594
430719059500	GS0595
430719059600	GS0596
430719059700	GS0597
430719059800	GS0598
430719059900	GS0599
430719060000	GS0600
430719060100	GS0601
430719060200	GS0602
430719060300	GS0603
430719060400	GS0604
430719060500	GS0605
430719060600	GS0606
430719060700	GS0607
430719060800	GS0608
430719060900	GS0609
430719061000	GS0610
430719061100	GS0611
430719061200	GS0612
430719061300	GS0613
430719061400	GS0614
430719061500	GS0615
430719061600	GS0616
430719061700	GS0617
430719061800	GS0618
430719061900	GS0619
430719062000	GS0620
430719062200	GS0622

CODE	SHORT
430719062300	GS0623
430719062400	GS0624
430719062500	GS0625
430719062600	GS0626
430719062700	GS0627
430719062800	GS0628
430719062900	GS0629
430719063000	GS0630
430719063100	GS0631
430719063200	GS0632
430719063300	GS0633
430719063400	GS0634
430719063500	GS0635
430719063600	GS0636
430719063700	GS0637
430719063800	GS0638
430719066300	GS0663
430719066400	GS0664
430719066900	GS0669
430719067000	GS0670
430719067100	GS0671
430719067300	GS0673
430719067400	GS0674
430719067500	GS0675
430719067600	GS0676
430719067700	GS0677
430719067800	GS0678
430719067900	GS0679
430719068000	GS0680
430719068100	GS0681
430719068200	GS0682
430719068300	GS0683
430719068400	GS0684
430719068500	GS0685
430719068600	GS0686
430719068700	GS0687
430719068800	GS0688
430719068900	GS0689
430719069000	GS0690
430719069100	GS0691
430719069200	GS0692
430719069300	GS0693
430719069400	GS0694
430719069500	GS0695

CODE	SHORT	CODE	SHORT	CODE	SHORT
430719069600	GS0696	430719074000	GS0740	430719078400	GS0784
430719069700	GS0697	430719074100	GS0741	430719078500	GS0785
430719069800	GS0698	430719074200	GS0742	430719078600	GS0786
430719069900	GS0699	430719074300	GS0743	430719078700	GS0787
430719070000	GS0700	430719074400	GS0744	430719078800	GS0788
430719070100	GS0701	430719074500	GS0745	430719078900	GS0789
430719070200	GS0702	430719074600	GS0746	430719079000	GS0790
430719070300	GS0703	430719074700	GS0747	430719079100	GS0791
430719070400	GS0704	430719074800	GS0748	430719079200	GS0792
430719070500	GS0705	430719074900	GS0749	430719079300	GS0793
430719070600	GS0706	430719075000	GS0750	430719079400	GS0794
430719070700	GS0707	430719075100	GS0751	430719079500	GS0795
430719070800	GS0708	430719075200	GS0752	430719079600	GS0796
430719070900	GS0709	430719075300	GS0753	430719079700	GS0797
430719071000	GS0710	430719075400	GS0754	430719079800	GS0798
430719071100	GS0711	430719075500	GS0755	430719079900	GS0799
430719071200	GS0712	430719075600	GS0756	430719080000	GS0800
430719071300	GS0713	430719075700	GS0757	430719080100	GS0801
430719071400	GS0714	430719075800	GS0758	430719080200	GS0802
430719071500	GS0715	430719075900	GS0759	430719080300	GS0803
430719071600	GS0716	430719076000	GS0760	430719080400	GS0804
430719071700	GS0717	430719076100	GS0761	430719080500	GS0805
430719071800	GS0718	430719076200	GS0762	430719080600	GS0806
430719071900	GS0719	430719076300	GS0763	430719080700	GS0807
430719072000	GS0720	430719076400	GS0764	430719080900	GS0809
430719072100	GS0721	430719076500	GS0765	430719081000	GS0810
430719072200	GS0722	430719076600	GS0766	430719081100	GS0811
430719072300	GS0723	430719076700	GS0767	430719081200	GS0812
430719072400	GS0724	430719076800	GS0768	430719081300	GS0813
430719072500	GS0725	430719076900	GS0769	430719081400	GS0814
430719072600	GS0726	430719077000	GS0770	430719081500	GS0815
430719072700	GS0727	430719077100	GS0771	430719081600	GS0816
430719072800	GS0728	430719077200	GS0772	430719081700	GS0817
430719072900	GS0729	430719077300	GS0773	430719081800	GS0818
430719073000	GS0730	430719077400	GS0774	430719081900	GS0819
430719073100	GS0731	430719077500	GS0775	430719082000	GS0820
430719073200	GS0732	430719077600	GS0776	430719082100	GS0821
430719073300	GS0733	430719077700	GS0777	430719082200	GS0822
430719073400	GS0734	430719077800	GS0778	430719082300	GS0823
430719073500	GS0735	430719077900	GS0779	430719082400	GS0824
430719073600	GS0736	430719078000	GS0780	430719082500	GS0825
430719073700	GS0737	430719078100	GS0781	430719082600	GS0826
430719073800	GS0738	430719078200	GS0782	430719082700	GS0827
430719073900	GS0739	430719078300	GS0783	430719082800	GS0828

CODE	SHORT
430719082900	GS0829
430719083000	GS0830
430719083100	GS0831
430719083200	GS0832
430719083300	GS0833
430719083400	GS0834
430719083500	GS0835
430719083600	GS0836
430719083700	GS0837
430719083800	GS0838
430719083900	GS0839
430719084000	GS0840
430719084100	GS0841
430719084200	GS0842
430719084300	GS0843
430719084400	GS0844
430719084500	GS0845
430719084600	GS0846
430719084700	GS0847
430719084800	GS0848
430719084900	GS0849
430719085000	GS0850
430719085100	GS0851
430719085200	GS0852
430719085300	GS0853
430719085400	GS0854
430719085500	GS0855
430719085600	GS0856
430719085700	GS0857
430719085800	GS0858
430719085900	GS0859
430719086000	GS0860
430719086100	GS0861
430719086200	GS0862
430719086300	GS0863
430719086400	GS0864
430719086500	GS0865
430719086600	GS0866
430719086700	GS0867
430719086800	GS0868
430719086900	GS0869
430719087000	GS0870
430719087100	GS0871
430719087200	GS0872

CODE	SHORT
430719087300	GS0873
430719087400	GS0874
430719087500	GS0875
430719087600	GS0876
430719087700	GS0877
430719087800	GS0878
430719087900	GS0879
430719088000	GS0880
430719088100	GS0881
430719088200	GS0882
430719088300	GS0883
430719088400	GS0884
430719088500	GS0885
430719088600	GS0886
430719088700	GS0887
430719088800	GS0888
430719088900	GS0889
430719089000	GS0890
430719089100	GS0891
430719089200	GS0892
430719089300	GS0893
430719089400	GS0894
430719089500	GS0895
430719089600	GS0896
430719089700	GS0897
430719089800	GS0898
430719089900	GS0899
430719090000	GS0900
430719090100	GS0901
430719090200	GS0902
430719090300	GS0903
430719090400	GS0904
430719090500	GS0905
430719090600	GS0906
430719090700	GS0907
430719090800	GS0908
430719090900	GS0909
430719091000	GS0910
430719091100	GS0911
430719091200	GS0912
430719091300	GS0913
430719091400	GS0914
430719091500	GS0915
430719091600	GS0916

CODE	SHORT
430719091700	GS0917
430719091800	GS0918
430719091900	GS0919
430719092000	GS0920
430719092100	GS0921
430719092200	GS0922
430719092300	GS0923
430719092400	GS0924
430719092500	GS0925
430719092600	GS0926
430719092700	GS0927
430719092800	GS0928
430719092900	GS0929
430719093000	GS0930
430719093100	GS0931
430719093200	GS0932
430719093300	GS0933
430719093400	GS0934
430719093500	GS0935
430719093600	GS0936
430719093700	GS0937
430719093800	GS0938
430719093900	GS0939
430719094000	GS0940
430719094100	GS0941
430719094200	GS0942
430719094300	GS0943
430719094400	GS0944
430719094500	GS0945
430719094600	GS0946
430719094700	GS0947
430719094800	GS0948
430719094900	GS0949
430719095000	GS0950
430719095100	GS0951
430719095200	GS0952
430719095300	GS0953
430719095400	GS0954
430719095500	GS0955
430719095600	GS0956
430719095700	GS0957
430719095800	GS0958
430719095900	GS0959
430719096000	GS0960

CODE	SHORT
430719096100	GS0961
430719096200	GS0962
430719096300	GS0963
430719096400	GS0964
430719096500	GS0965
430719096600	GS0966
430719096700	GS0967
430719096800	GS0968
430719096900	GS0969
430719097000	GS0970
430719097100	GS0971
430719097200	GS0972
430719097300	GS0973
430719097400	GS0974
430719097500	GS0975
430719097600	GS0976
430719097700	GS0977
430719097800	GS0978
430719097900	GS0979
430719098000	GS0980
430719098100	GS0981
430719098200	GS0982
430719098300	GS0983
430719098400	GS0984
430719098500	GS0985
430719098600	GS0986
430719098700	GS0987
430719098800	GS0988
430719098900	GS0989
430719099000	GS0990
430719099100	GS0991
430719099200	GS0992
430719099300	GS0993
430719099400	GS0994
430719099500	GS0995
430719099600	GS0996
430719099700	GS0997
430719099800	GS0998
430719099900	GS0999
430719100000	GS1000
430719100100	GS1001
430719100200	GS1002
430719100300	GS1003
430719100400	GS1004

CODE	SHORT
430719100500	GS1005
430719100600	GS1006
430719100700	GS1007
430719100800	GS1008
430719100900	GS1009
430719101000	GS1010
430719101100	GS1011
430719101200	GS1012
430719101300	GS1013
430719101400	GS1014
430719101500	GS1015
430719101600	GS1016
430719101700	GS1017
430719101800	GS1018
430719101900	GS1019
430719102000	GS1020
430719102100	GS1021
430719102200	GS1022
430719102300	GS1023
430719102400	GS1024
430719102500	GS1025
430719102600	GS1026
430719102700	GS1027
430719102800	GS1028
430719102900	GS1029
430719103000	GS1030
430719103100	GS1031
430719103200	GS1032
430719103300	GS1033
430719103400	GS1034
430719103500	GS1035
430719103600	GS1036
430719103700	GS1037
430719103800	GS1038
430719103900	GS1039
430719104000	GS1040
430719104100	GS1041
430719104200	GS1042
430719104300	GS1043
430719104400	GS1044
430719104500	GS1045

Applicazione per marca e veicolo
Vehicle application guide
Zuordnung nach Marke und Fahrzeug
Affectations par marques et véhicules
Aplicación por marca y vehículo
Aplicação por marca e veículo
Εφαρμογη ανα μοντελο
Zastosowanie dla marki i pojazdu
Применение по марке и модели
Marka ve otomobile göre uygulama

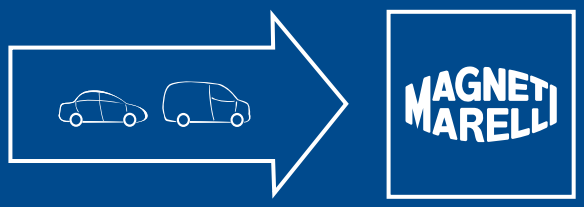

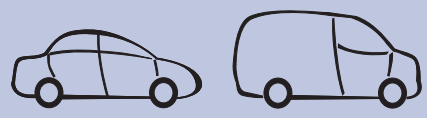

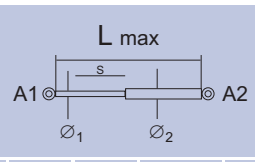

Ø1 [mm]	Ø2 [mm]	L max	S [mm]	F [N]	A1	A2	O.E.	

ALFA ROMEO

145 (930)		01/94→01/01	8	19	310	110	580	R25	R25	60567794	GS0438
146 (930)		01/94→01/01	8	19	522	210	300	R22	R22	60604823	GS0270
146 (930)	with engine 2.0 16V, type "Junior"	02/95→01/01	8	19	522	210	400	R22	R22	60612565	GS0271
147 (937)		01/01→	8	19	440	171	370	R25	R22	46771551	GS0221
147 (937)		01/01→2010	8	19	355	120	350	R28	R22	46739202	GS0762
155 (167)		01/92→12/97	8	19	280	90	500	R25	R23	60540532	GS0530
155 (167)		01/92→12/97	8	19	280	90	600	R25	R23	60583192	GS0531
155 (167)		01/92→12/97	8	19	675	279	210	R36	R36	60604174, 60564112	GS0599
156 (932)		09/97→	8	19	264	82	370	R25	R25	60651067	GS0214
156 (932)		09/97→	8	19	264	82	460	R25	R25	60657685	GS0215
156 (932)		09/97→	8	19	400	149	300	R25	R25	60654724	GS0386
156 SW (932)		05/00→	8	19	348	120	620	R22	R22	60664833	GS0435
159 (140)		09/05→	8	19	604	253	250	R22	R22	60688574	GS0763
159 (140)		09/05→	8	19	291	107	380	R25	R22	60680087	GS0764
159 Sportwagon		03/06→	10	22	250	72	1180	R47	R47	50508010,60683933	GS0946
164 (164)		09/91→06/97	8	19	278	90	480	R22	R22	60591762	GS0272
164 (164)		01/87→08/91	8	19	278	90	430	R22	R22	60566147	GS0273
164 (164)		06/87→09/98	8	19	615	243	240	R2	R35	60558222, 6055822	GS0968
166 (936)		09/98→10/00	8	19	438	170	480	R25	R25	60658924	GS0444
166 (936)		09/98→	8	19	279	95	390	R25	R25	60622424	GS0411
33 Restyling (907B)	(exclude Sweden)	01/90→09/94	8	19	548	286	230	R22	R9	60505771	GS0588
Brera		01/06→2010	8	19	604	253	250	R22	R22	60688574	GS0763
Brera		01/06→2010	8	18,5	470	180	350	R22	R22	60694616, 0060694	GS0691
GT		11/03→2010	8	19	355	120	350	R28	R22	46739202	GS0762
GT		11/03→2010	8	19	400	139	400	R25	R25	50508060	GS0938
GTV (916C)		06/95→04/05	8	19	393	150	170	R22	R22	60594694, 6059469	GS0962
GTV		05/98→04/05	8	19	669	186	200	R22	R22	60689182, 60577413, 60594694	GS1023
MITO (955)		09/08→	8	18,5	456	165	320	R25	R22	50515442	GS0692
Spider		09/06→2010	8	19	604	253	250	R22	R22	60688574	GS0763
Spider (916C,916S)		05/98→04/05	8	19	669	186	200	R22	R22	60689182, 60577413, 60594694	GS1023
Spider (916S)		06/95→04/05	8	19	393	150	170	R22	R22	60594694, 6059469	GS0962
Spider (939)		09/06→	8	19	270	82	380	R25	R25	60694168	GS0961

AUDI

80 Avant, 80 Avant Quatro (8C,B4)		08/91→10/94	8	19	575	220	500	R25	R22	R239827552D	GS0429
80, 80 Quatro (89,8A)		09/86→09/91	10	22	272	90	670	R23	R23	893827552A	GS0532
80, 80 Quatro (89,8A)		09/89→09/91	8	19	615	260	400	R2	R35	893823360	GS0585
80, 80 Quatro (89,R23)		09/86→09/91	8	19	275	90	420	R25	R25	893827552	GS0409
80, 80 Quatro (8C,B4)		08/91→10/94	8	19	280	95,5	630	R21	R25	R23582755R2	GS0103
80, 80 Quatro (8C,B4)		08/91→10/94	8	19	279	90	580	R22	R25	R235827552	GS0371
80, 80 Quatro (8C,B4), 80 Avant, 80 Avant Quatro (8C,B4)		08/91→10/94	8	19	668	280	375	R2	R9	R230823360A	GS0331

MAGNETI MARELLI

			Ø1 [mm]	Ø2 [mm]	L max	S [mm]	F [N]	A1	A2	O.E.	
AUDI											
90, 90 Quatro (89,8A)		04/87→12/91	10	22	272	90	670	R23	R23	893827552A	GS0532
90, 90 Quatro (89,8A)		04/87→12/91	8	19	615	260	400	R2	R35	893823360	GS0585
100 (A4, C3)	from Vet. 44-F-115151	04/85→12/90	8	19	465	187	320	R2	R9	443823359B	GS0412
100 (A4,C4)		12/90→07/94	8	19	402	160	390	R21	R21	R95827552	GS0110
100 (A4,C4)		12/90→07/94	8	19	722	306	310	R22	R22	R90823359B, R90823359C, R103823359	GS0380
100 Avant (A4, C3)		08/82→12/90	8	19	580	247	470	R25	R25	R95827551	GS0420
200 (44)	from Vet. 44-F-115151	04/85→12/90	8	19	465	187	320	R2	R9	443823359B	GS0412
200 Avant (44)		08/82→12/90	8	19	580	247	470	R25	R25	R95827551	GS0420
A2 (8Z)		02/00→	8	19	500	200	420	R22	R22	8Z082755R2, 8Z082755R3	GS0365
A3 (8L)		09/96→08/00	8	19	500	205	420	R25	R22	8D9827552	GS0196
A3 (8L)		08/00→05/03	8	19	500,5	193	470	R25	R22	8D9827552F	GS0197
A3 (8L)		09/96→05/03	8	19	500	200	350	R25	R22	8L0823359	GS0260
A3 (8P1)		05/03→	8	19	485	193	460	R25	R25	8P3827552A 8P3827552A	GS0460
A3 (8P1)		05/03→	8	19	494	185	490	R25	R25	8P3827552D	GS0461
A3 (8P1)		05/03→	8	19	715	306	290	R22	R22	8P0823359	GS0268
A3 (8P1)		08/03→	8	19	712	305	290	R28	R22	8P0823359A;8P0823359B	GS0674
A3 Convertible		04/08→	8	19	255	78	350	R25	R50	8P7827552C, 8P7827552D, 8P7827552F	GS0909
A3 Sportwagon		09/04→	8	19	530	210	410	R22	R28	8P4827552B	GS0815
A4 (8D2,B5)		01/94→11/00	8	19	279	95	490	R22	R22	8D5827552, 8D5827552C, 8D5827552D, 8D5827552F	GS0134
A4 (8E2,B6)		11/00→	10	22	298	95	650	R22	R22	R105827552F, R105827552G	GS0222
A4 (8E2,B6), A4 Avant (8E5,B6)		11/00→	8	19	722	315	325	R22	R22	8E0823359A	GS0381
A4 Avant (8D5,B5)		11/95→09/01	8	19	500	205	420	R25	R22	8D9827552	GS0196
A4 Avant (8E5,B6)		09/01→	8	19	500	200	530	R25	R25	8D9827552E	GS0226
A4 Cabrio (8H7)		04/02→	8	19	715	306	290	R22	R22	8H0823359	GS0268
A4 (8D2,B5), A4 Avant (8D5,B5)		01/94→11/00	8	19	722	306	310	R57	R57	8D0823359, 8D0823359A, 8D0823359B, D0823354	GS0744
A4 (8EC)		11/04→12/07	10	22	298	80	700	R22	R22	8E5827552J, 8E5827552K	GS0811
A4 (8H7, 8HE)		07/02→12/05	8	19	310	110	590	R22	R22	8H0827552B	GS0907
A4 Avant (8ED) B7		11/04→03/08	8	19	490	198	530	R23	R23	8E9827552G, 8E9827552H	GS0813
A4 Avant (8K5) B8	with automatic opening	04/08→	8	19	502	205	530	R22	R22	8K9827552, 8K9827552A	GS0663
A4 Avant (8K5) B8		04/08→	8	19	502	205	530	R22	R22	8K9827552	GS0928
A4 B8 (8K2), A4 Avant (8K5)		11/07→	8	19	765	335	340	R22	R22	8T0823359	GS0807
A5 (8T)		06/07→	8	19	765	335	340	R22	R22	8T0823359	GS0807
A6 (A4,C4)		06/94→08/97	8	19	402	160	390	R21	R21	R95827552	GS0110

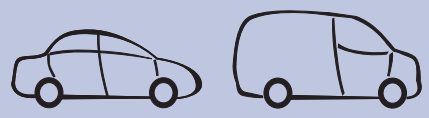

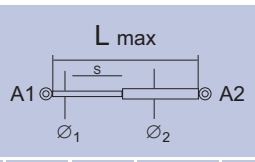

Ø1 [mm]	Ø2 [mm]	L max	S [mm]	F [N]	A1	A2	O.E.	
AUDI								
A6 (A4,C4), A6 Avant (A4,C4)	06/94→08/97	8	19	722	306	310	R22	R22	R103823359	GS0380
A6 (R10)	from Vet. R10-1-000001	05/00→05/04	10	22	298	95	650	R22	R22	R105827552F	GS0222
A6 (R10,C5)	up to Vet. R10-Y-120000	08/97→04/00	10	22	278	90	630	R22	R22	R10582755R2 R105827552C R105827552D	GS0233
A6 (R10,C5), A6 Avant (R10,C5)	08/97→05/04	8	19	722	306	280	R22	R22	3B0823239A, 3B0823359, 3B0823359B	GS0265
A6 (4F2)	05/04→	10	22	298	80	730	R22	R22	4F5827552, 4F5827552B	GS0810
A6 Avant (4B)	with heated window and decreased open angle from Vet. 4B-Y-120001	04/00→	10	22	483	175	740	R22	R22	4B9827552H	GS0511
A6 Avant (4B)	with decreased open angle from Vet. 4B-Y-120001	04/00→	10	22	483	175	690	R22	R22	4B9827552J	GS0512
A6 Avant (4B, C5)	12/97→01/05	10	22	500	195	690	R22	R22	4B9827552L, 4B9827552M	GS0238
A6 Avant (4B,C5)	with heated window and decreased open angle up to Vet. 4B-Y-120000	08/97→04/00	10	22	483	175	740	R22	R22	4B9827552D, 4B9827552H	GS0511
A6 Avant (A4,C4)	06/94→08/97	8	19	647	275	450	R22	R22	R99827552	GS0410
A6 Avant (R10)	with heated window up to Vet. R10-Y-120001	04/00→	10	22	500	200	690	R22	R22	R109827552E	GS0238
A6 Avant (R10)	up to Vet. R10-Y-120001	04/00→	10	22	500	200	635	R22	R22	R109827552G	GS0239
A6 Avant (R10, C5)	12/97→01/05	10	22	500	195	690	R22	R22	R109827552L, R109827552M	GS0238
A6 Avant (R10, C5)	04/00→	10	22	500	195	690	R22	R22	4B9827552C, 4B9827552M	GS0238
A6 Avant (R10,C5)	up to Vet. R10-Y-120000	08/97→04/00	10	22	500	190	635	R25	R22	4B9827552A	GS0237
A6 Avant (R10,C5)	with heated window up to Vet. R10-Y-120000	08/97→04/00	10	22	500	195	690	R22	R22	4B9827552C, 4B9827552M	GS0238
A6 (4F2), A6 (4F5) Avant	05/04→	8	19	720	300	180	R28	R22	4F0823359, 4F0823359A	GS0803
A6 (4F5) Avant	03/05→	8	19	475	184	650	R22	R28	4F9827552B, 4F9827552C	GS0812
A6 (A4,C4), A6 Avant (A4,C4)	06/94→10/97	10	22	943	417	380	R22	R57	4A0823359C	GS0743
A8 (4D)	03/94→10/02	8	19	403,5	160	310	R22	R22	4D0823551B, 4D0827551A, 4D0827551B	GS0274
A8 (4D)	03/94→10/02	8	19	529	215	245	R22	R22	4D0823359F	GS0275
A8 (4E)	10/02→07/10	8	19	375	144	280	R22	R51	4E0823359C	GS1012
A8 (4E)	with automatic opening, left side	08/03→04/10	8	19	408	152	390	R22	R51	4E0827551B, 4E0827551C	GS1013
A8 (4E)	with automatic opening, right side	08/03→04/10	8	19	408	152	265	R22	R51	4E0827552B, 4E0827552C	GS1014
Allroad (4BH)	05/00→	10	22	480	173	690	R22	R22	4B9827552N	GS0513
Cabriolet (89)	06/91→	8	19	668	280	375	R2	R9	R230823360A	GS0331
Convertible (8G7,B4)	11/92→08/00	8	19	274	90	740	R22	R23	8G0827552C, 8GO827552B	GS0977
Coupe, Coupe Quatro (8C)	11/88→12/95	8	19	605	247	340	R25	R22	895823552A, 895523552A	GS0533

MAGNETI MARELLI

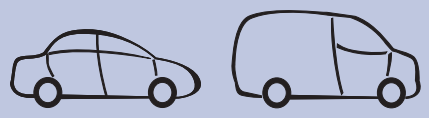

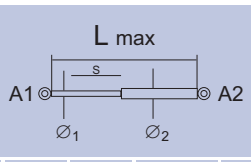

			Ø1 [mm]	Ø2 [mm]	L max	S [mm]	F [N]	A1	A2	O.E.	MAGNETI MARELLI
AUDI											
Q5		11/08→	8	19	500	190	600	R22	R22	8R0827552	GS0681
Q5 (8R)		11/08→	8	19	500	190	500	R28	R28	8R0827552A	GS0937
Q5 (8R)		11/08→	8	19	305	96	410	R25	R25	8R0823359A	GS0945
Q7 (4L)		03/06→	8	19	485	200	170	R22	R28	4L0823359	GS0805
Q7 (4L)	without automatic opening	03/06→	8	19	500	200	525	R23	R28	4L0827552C, 4L0827552F	GS0840
Q7(4L)	without automatic opening	03/06→	10	22	498	191	630	R28	R28	4LO827552E, 4E0827551A	GS1015
TT (8J3)		10/06→	8	19	470	160	630	R22	R22	8J8827552	GS0819
TT (8J3) / TT Roadster (8J9)		10/06→	8	19	315	120	440	R25	R22	8J0823359C	GS0806
TT Roadster (8J9)		02/07→	8	19	331	115	520	R22	R22	8J7827552	GS1045
TT Coupe (8N)		06/98→	8	19	405	160	620	R22	R22	8N8827552A, 8N8827552B	GS0450
TT Coupe (8N)		06/98→	8	19	279	95	490	R22	R22	8N0823359	GS0134
TT Coupe (8N)		06/98→	8	19	405	150	520	R22	R22	8N8827552	GS0276
TT Roadster (8N)		06/98→	8	19	279	95	490	R22	R22	8N0823359	GS0134
TT Roadster (8N9) Convertible		10/99→06/06	8	19	402,5	160	150	R22	R22	8N7827552C, 8N7827552A	GS0933
AUSTIN											
Mini Metro		→80	8	19	542	210	300	R22	R22	AFP1282	GS0041
AUTOBIANCHI											
A112		69→87	8	19	362	135	190	R22	R10	4484653, 4480856	GS0017
Y10 (156)		03/85→12/95	8	19	600	250	160	R25	R25	60617400, 5970097	GS0589
BMW											
1 (E81, E87)		09/04→2011	8	19	412	163	400	R25	R22	51247060622, 706	GS0757
1 (E82), (E88)		10/07→	8	18,5	362	112	260	R25	R25	41627166758	GS0699
1 (E82, E88)		07→	8	19	374	140	350	R25	R25	51237118370	GS0670
3 (E3)		07/87→06/94	8	19	635	259	290	R22	R22	51241947096	GS0451
3 (E36)		03/94→09/94	8	19	611	205	350	R22	R22	51248146290	GS0452
3 (E36)		12/90→04/99	8	19	294	80	480	R22	R22	51241960862, 51248151579	GS0169
3 (E36)		09/94→08/00	8	19	596	190	380	R22	R22	51248206652	GS0234
3 (E36)		03/94→08/00	8	19	596	195	430	R22	R22	5124249R2849	GS0235
3 (E36)		03/94→08/00	8	19	596,5	190	420	R22	R22	51248230070	GS0236
3 (E36)		12/90→04/99	8	19	293	80	610	R22	R22	51242264448	GS0259
3 (E36)		01/92→08/99	6	15	410	160	280	R2	R9	51238119558	GS0414
3 (E36)		05/95→08/99	8	19	517	190	380	R25	R25	51248171158, 51248217305	GS0428
3 (E46)		05/98→	8	19	350	100	300	R25	R25	51244212802, 51248220075, 51248254281	GS0162
3 (E46)		05/98→	8	19	541	200	450	R25	R25	51248232873	GS0212

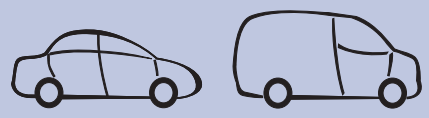

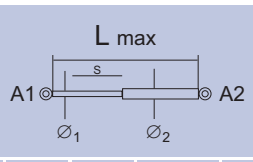

O.E.

			Ø1 [mm]	Ø2 [mm]	L max	S [mm]	F [N]	A1	A2		
BMW											
3 (E46)	engine hood - all body types	05/98→	8	19	316	110	580	R25	R25	51238202688	GS0262
3 (E90, E91, E92, E93)	(without M3 type)	01/05→	8	19	400	160	330	R25	R28	51237060550	GS0755
3 (E90)		01/05→	8	19	370	110	320	R25	R25	51244365788, 51244394052, 51247060623	GS0760
3 (E92)		09/06→	8	18,5	369	110	320	R25	R25	51247129194	GS0700
3 (E93)		03/07→	8	18,5	553	225	220	R25	R25	51247129215	GS0701
3 E46		04/00→05	8	19	366	117	280	R25	R25	51248227895	GS0735
3 E46		06/01→01/05	8	19	627	205	660	R22	R22	51247118885, 51247038248, 51248251547	GS0736
3 Touring (E91)		09/05→	8	19	545	210	450	R22	R22	51247127875	GS0758
5 (E28)		05/81→12/87	6	15	440	142	380	R2	R9	51231868555, 51231907962, 51231927129	GS0590
5 (E34)		02/88→11/95	8	19	365	140	410	R2	R35	51241934270, 51248110327	GS0445
5 (E34)		02/88→11/95	8	19	365	145	480	R2	R35	51242231663	GS0446
5 (E34)	(use original mounting from the cylinder side)	09/91→02/97	8	19	675	263	360	R23	R27	51248149327, 51248149328, 51248230369, 51248230370	GS0522
5 (E34)		02/88→02/97	8	19	242	80	380	R2	R38	51231944119	GS0523
5 (E39)		09/95→06/04	10	22	333	100	700	R25	R25	51238174866	GS0439
5 (E39)	(use original mounting from the cylinder side)	09/95→05/96	8	19	335	95	520	R25	R27	51248159239	GS0521
5 (E39)	tailgate window	03/97→06/04	8	19	241	70	560	R2	R23	51248190688	GS0534
5 (E39)	(use original mounting from the cylinder side)	05/96→07/03	8	19	345	100	520	R25	R27	51248222913	GS0582
5 Touring (E61)		06/04→	8	19	313	112	330	R25	R25	51237008745, 5124	GS0669
6 (E24)		05/79→04/89	8	19	500	200	230	R2	R35	51231869147	GS0591
6 (E63)		01/04→	8	19	425	165	350	R25	R22	51247008764	GS0761
6 (E63)		01/04→	8	19	291	65	540	R25	R25	51237070670	GS0963
6 Cabrio (E64)		04/04→	8	19	291	65	540	R25	R25	51237070670	GS0963
7 (E23)		02/77→08/86	8	19	500	200	230	R2	R35	51231869147	GS0591
7 (E32)		09/86→06/94	8	19	254	95	490	R2	R35	51241908431	GS0639
7 (E32)		09/86→06/94	6	15	254	90	420	R2	R35	11811869147, 51231908465	GS0640
7 (E38)	(use original mounting from the cylinder side)	06/94→11/01	8	19	310	90	640	R25	R27	51248171480	GS0524
7 (E38)		06/94→11/01	10	22	326	105	800	R25	R25	51238150077	GS0434
7 (E32)		09/86→06/94	8	19	254	95	490	R46	R46	51241908431	GS0924
7 (F01,F02,F03,F04)		10/08→	8	19	278	70	470	R22	R51	51237185032	GS1021
X3 (E83)		01/04→2010	8	19	625	210	590	R28	R25	51243400379	GS0759
X3 (E83)		01/04→2010	10	22	285	100	720	R22	R25	51233400352	GS0835
X5 (E53)		05/00→2006	8	19	288	104	640	R25	R25	51238402551	GS0754
X5 (E53)		05/00→2006	8	19	530	175	530	R25	R25	51248402405	GS0756

MAGNETI MARELLI

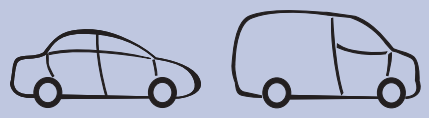

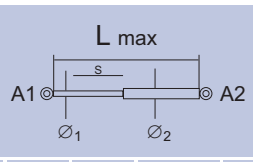

			Ø1 [mm]	Ø2 [mm]	L max	S [mm]	F [N]	A1	A2	O.E.	MAGNETI MARELLI
BMW											
X5 (E70)		02/07→	8	18,5	410	155	390	R28	R22	51237148346	GS0702
X6 (E71, E72)		05/08→	8	18,5	410	155	390	R28	R22	51237148346	GS0702
Z3		10/95→01/03	8	19	214	62	680	R25	R25	51248399087	GS0930
Z4 (E85)		02/03→2008	8	19	296	95	250	R25	R25	51247016186	GS0934
Z4 (E85)		02/03→2008	8	19	672	240	180	R25	R22	51237016178	GS0943
CHEVROLET											
Aveo		03/05→	8	19	386,5	150	350	R22	R28	96540939	GS0780
Captiva (C100,C140)		06/06→	8	19	427	165	240	R22	R22	96830124	GS0996
Captiva (C100,C140)		06/06→	8	19	585	246	500	R25	R25	96830123, 9698446	GS0997
Kalos		03/05→	8	19	386,5	150	350	R22	R28	96540939	GS0780
Lacetti		03/05→	8	19	462,5	190	560	R23	R23	96548931	GS0859
Nubira		05/97→03	8	19	447	172	500	R21	R21	96306833, 96557538	GS0095
Nubira Estate		01/05→	8	19	449	179	520	R25	R25	96306833, 9655753	GS1027
Spark/Matiz		09/98→	8	19	496	188	270	R28	R28	96598008, 96507773, 96314606, 96563503, 96518910, 96557539	GS0097
Tacuma/Rezzo		09/00→	10	22	382	140	660	R23	R23	96310381, 96394240, 96940087	GS0447
CHRYSLER											
300 C		09/04→2010	8	18,5	293	104	280	R22	#N/D!	04589589AA	GS0716
300 C, Touring		09/04→2010	6	15	314	110	355	R28	R22	04589607AA, 5008938AA	GS0715
300 Touring		09/04→2010	10	22	430,5	130	1050	R28	R28	04589626AA	GS0709
Grand Voyager IV		10/07→	10	22	665	195	765	R28	R28	05109605AC	GS0710
CITROËN											
AX		86→12/98	8	19	544	224	240/300	R25	R25	95631956, 9563195680	GS0598
Berlingo		07/96→	8	19	700	300	670	R23	R23	8731	GS0112
Berlingo		04/08→	10	22	620	225	625	R22	R25	8731S0	GS0684
Berlingo II	with equipment for orga no.11829	04/08→	8	19	543	220	200	R22	R22	8731R9, 8731V6	GS1018
Berlingo II	with equipment from orga no.118230	04/08→	8	19	563	235	140	R25	R50	8731R8	GS1019
BX		01/82→10/86	8	19	650	275	240/300	R2	R35	95568454, 9556845480	GS0592
BX		10.86→11/94	8	19	650	275	240/300	R25	R35	95635988, 9563598880	GS0593
BX Break		08/85→11/94	8	19	653	260	400/463	R22	R22	9560649080, 95606490	GS0453
BX GT - Sport - IE		01/82→10/86	8	19	650	275	310/370	R2	R35	95598526, 9559852680	GS0594
BX Turbo, 19 TRS Athena, 19 TZS IE		01/90→11/94	8	19	650	275	310/370	R25	R35	95635989, 9563598980	GS0596
BX Turbo, BX 19 GTI		10.86→12/89	8	19	640	278	300	R25	R35		GS0595

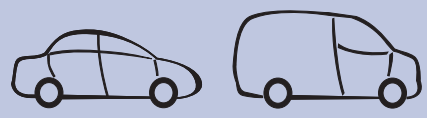

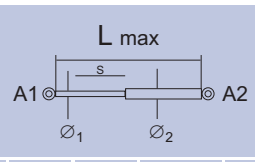

O.E.

MAGNETI MARELLI

CITROËN

			Ø1 [mm]	Ø2 [mm]	L max	S [mm]	F [N]	A1	A2	O.E.	MAGNETI MARELLI
C1		06/05→	8	19	555	228	305	R22	R22	689500H020, 8731L0	GS0753
C2		09/03→	8	19	460	180	380	R22	R22	8731H8, 9641721980	GS0454
C3		02/02→	8	19	445	162	420	R22	R22	8731G3, 9639853880	GS0150
C4 Coupe		11/04→	8	19	558	235	530	R25	R25	9650854180, 8731J9	GS0889
C4 Grand Picasso (UA)	rear window (7 seats)	10/06→	8	19	589	240	110	R25	R25	9654438880, 8731N8	GS0965
C4 I (LC)		11/04→2010	8	19	545	195	425	R25	R22	9647295480	GS0733
C4 I Coupe		11/04→2010	8	19	558	235	500	R23	R23	96472953808731K0	GS0847
C4		07/06→	8	19	313,5	78,5	495	R22	R51	8731L9	GS1020
C4 Picasso	tailgate with opening window	02/07→	8	19	640	255	F3 595	R22	R28	9654433580, 8731P4	GS0821
C4 Picasso	tailgate without opening window	02/07→	8	19	640	255	F3 565	R22	R28	9654433480, 8731P2	GS0822
C4 Grand Picasso	without opening window	10/06→	8	19	585	190	F3-625	R22	R28	9654438680, 8731N9	GS0848
C5		03/01→	8	19	512	200	450	R22	R22	8731F6	GS0385
C5 (RC)		09/04→	10	22	494	175	570	R25	R50	8731K2, 8731K1	GS0958
C5		02/08→	8	19	375	135	495	R42	R25	8731R7, 9682256580	GS0679
C5 Break		02/08→	8	19	547	222	535	R22	R22	8731R6	GS0683
C5, C5 Break		03/01→	8	19	506	205	120/180	R25	R25	792514	GS0462
C5 Break	use original mounting from the cylinder side	03/01→	8	19	288	95	250	R22	R27	8731F7, 9640894580	GS0535
C6		09/05→	8	19	580	245	165	R25	R25	792520	GS0887
C6 (TD)		09/05→	8	19	387	139	465	R25	R25	8731K8, 9661815180	GS0967
C8		07/02→	8	19	631	230	510	R21	R21	8731G6	GS0340
C-CROSSER		02/07→	8	19	495	197	420	R22	R28	5802A007, 5802A008, 8731Q1	GS0841
C-CROSSER		02/07→	8	19	495	197	420	R22	R28	5802A007, 5802A008, 8731Q1	GS0841
CX		09/74→12/91	8	19	579	235	260/320	R2	R35	5429798	GS0597
CX Break		09/74→12/91	8	19	580	245	380	R16	R35	5459705, 5490307	GS0600
Evasion	up to Vet. 06944	06/94→11/95	8	19	627	230	630	R22	R22	8731A3	GS0455
Evasion	up to Vet. 07632	10/97→08/02	8	19	632	215	600	R22	R22	8731E5	GS0456
Evasion	from Vet. 06945 to 07631	11/95→10/97	8	19	610	200	600	R22	R22	8731C1	GS0457
Evasion	up to Vat. 07632	10/97→08/02	8	19	632	215	600	R21	R21	873100000	GS0359
GS Break		71→80	8	19	600	255	360	R2	R9	95492745	GS0011
GSA		79→86	8	19	600	255	200	R2	R9	75521825, 7552182580	GS0010
GSA Break		09/71→08/85	8	19	600	255	360	R2	R9	7552182580	GS0011
Jumpy / Dispatch		01/07→	10	22	700	172	1050	R22	R22	8731Q9	GS1044
Jumpy / Dispatch		01/07→	8	19	700	175	1050	R22	R22	8731P5, 1401103980, 8731Q9, 1498071080	GS0685
Nemo		02/08→	8	19	600	225	670	R22	R22	8731V0	GS0921

MAGNETI MARELLI

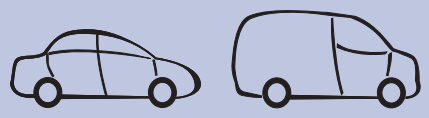

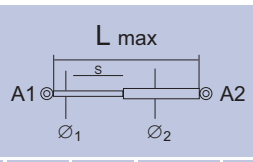

O.E.

			Ø1 [mm]	Ø2 [mm]	L max	S [mm]	F [N]	A1	A2		
CITROËN											
Saxo		05/96→02/02	8	19	611	230	300/355	R22	R22	8731C0, 9618119180	GS0148
Visa		78→12/82	8	19	600	255	500	R2	R9	95496134	GS0019
Visa		01/83→89	8	19	600	250	500	R2	R9	9558825480	GS0019
Xantia (X1)		07/93→01/98	8	19	600	230	510	R23	R23	873196, 873197	GS0504
Xantia (X1)		07/93→01/98	8	19	599	215	550	R22	R22	8731C2	GS0202
Xantia (X1)		07/93→01/98	8	19	599	215	600	R22	R22	949901, 8731C3	GS0203
Xantia Break (X1)		06/95→01/98	8	19	590,5	245	480	R22	R22	8731A8, 620915680, C101860033	GS0422
Xantia Break (X2)		01/98→09/01	8	19	590,5	245	480	R22	R22	8731A8, 620915680, C101860033	GS0422
XM, XM Break (Y3, Y4)		05/89→10/00	8	19	546	225	220	R22	R22	9563914480	GS0458
XM (Y3, Y4)		05/89→10/00	8	19	837	315	365	R23	R23	96095456	GS0505
XM Break (Y3, Y4)		05/89→10/00	8	19	630	220	570	R23	R23	96026964	GS0506
Xsara (N1)		04/97→	8	19	622	240	360	R25	R25	8731E3, 9621907680, 9630753280	GS0128
Xsara (N1), Xsara Break (N2), Xsara Coupe (N0), Xsara Picasso (N68)		09/00→	8	19	595	250	450	R22	R22	792513, 9637509380	GS0261
Xsara (N1), Xsara Break (N2), Xsara Picasso (N68)		04/97→09/00	8	19	458	160	300	R22	R22	792511, 9629618980	GS0269
Xsara Break (N2)		10/97→	8	19	656	260	400	R25	R25	8731E4, 9620677480	GS0427
Xsara Picasso (N68)		12/99→	8	19	670,5	275	390	R25	R25	8731F1	GS0161
ZX (N2)		09/91→06/97	8	19	600	250	320	R21	R21	96027543, 9602754380	GS0033
ZX (N2)		09/91→06/97	8	19	600	250	260/320	R22	R22	9612361280	GS0254
ZX Break (N2)		10/93→03/98	8	19	540	220	470/520	R23	R23	9612212280	GS0507
DACIA											
Logan MCV (KS)		02/07→	8	19	519	184	370	R22	R22	8200735264	GS0926
Sandero		06/08→	8	19	519	184	370	R22	R22	8200735264	GS0926
DAEWOO											
Kalos (KLAS)		09/02→	8	19	386,5	150	350	R22	R28	96540939	GS0780
Lanos		05/97→	8	19	473	172	420	R22	R22	96306157, 96324117, 96324119	GS0086
Lacetti		03/05→	8	19	462,5	190	560	R23	R23	96548931	GS0859
Matiz		09/98→	8	19	496	188	270	R28	R28	96598008, 96507773, 96314606, 96563503, 96518910, 96557539	GS0097
Matiz M200		2005→	8	19	406	162	335	R25	R22	96601844	GS1026

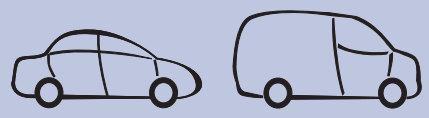

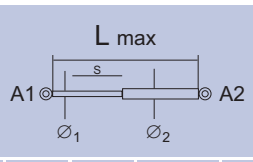

Ø1 [mm]	Ø2 [mm]	L max	S [mm]	F [N]	A1	A2	O.E.	
DAEWOO								
Nexia/Cielo	02/95→	8	19	549	232	355	R22	R22	90159607	GS0031
Nubira	05/97→03	8	19	435	165	500	R23	R23	96301822	GS0508
Nubira	05/97→03	8	19	324	115	290	R21	R21	96298318, 96557530	GS0094
Nubira	05/97→03	8	19	447	172	500	R21	R21	96306833, 96557538	GS0095
Nubira Wagon (KLAN)	07/03→	8	19	449	179	520	R25	R25	96306833, 9655753	GS1027
Tacuma/Rezzo	09/00→	10	22	382	140	660	R23	R23	96310381, 96394240	GS0514
Tico	02/95→01	10	22	726	280	420	R25	15a	81850A70B02000	GS0050
DAEWOO→FSO Lublin										
Lublin	-	→	8	19	509	200	400	R2	R9		GS0002
Żuk	-	→	8	19	509	200	400	R2	R9		GS0002
DAEWOO-FSO										
Polonez	1978→93	8	19	405	160	390	R2	R9	4369120	GS0001
Polonez	1978→93	8	19	405	160	390	R2	16a	21458	GS0070
Polonez Atu	1995→2002	8	19	256	86	280	R2	R9	63397	GS0057
Polonez Cargo/Sanitarka	1993→2002	8	19	405	160	550	R21	R21	58084	GS0044
Polonez Caro	1993→2002	8	19	405	160	500	R2	R9	041190, 077187	GS0007
Polonez Caro	1993→2002	8	19	405	160	500	R2	R9	77187	GS0059
Polonez Caro	1993→2002	8	19	405	160	500	R2	16a	21457	GS0069
Polonez Caro Plus	1997→2002	8	19	405	160	600	R2	R35	77763	GS0074
Polonez Combi	1999→2002	8	19	450	180	450	R21	R21	81768	GS0089
Polonez Truck		8	19	587	237	280	R21	R21	043882, 01171783	GS0027
Polonez Truck		8	19	700	300	260	R21	R21	21273	GS0045
Polonez Truck	additional storey mfg. by Z.P. BELLA	→93	8	19	700	300	200	R21	R21	21331	GS0051
Polonez Truck	additional storey mfg. by Z.P. BELLA	→	8	19	550	212	350	R21	R21	21333	GS0052
Polonez Truck	additional storey mfg. by LAMIPLAST	→	8	19	550	212	270	R3	R10	21377	GS0058
Polonez Truck	additional storey mfg. by ATAREX	08/93→	8	19	587	237	200	R21	R21	21406	GS0061
DAIHATSU										
Sirion II (M3)	05→10	8	19	414	160	410	R23	R23	68950B1031, 68960B1031	GS0966
FIAT										
126 Bis	87→99	8	19	550	212	230	R3	R10	7550938	GS0006
127	04/77→09/81	8	19	600	255	200	R2	R9	4392130	GS0010
127	06/71→03/77	8	19	549	229,5	350	R2	R9	4297742	GS0015
127	09/81→86	8	19	585	250	200	R2	R9	39401990	GS0034
127 Panorama	06/71→03/77	8	19	549	229,5	350	R2	R9	4297742	GS0015

MAGNETI MARELLI

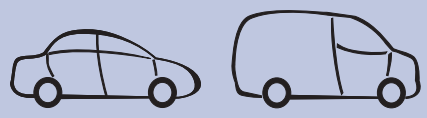

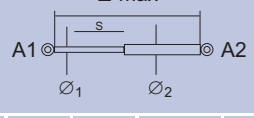

O.E.

MAGNETI MARELLI

FIAT

		Ø1 [mm]	Ø2 [mm]	L max	S [mm]	F [N]	A1	A2	O.E.	
127 L, C, CL	3	04/77→09/81	8	19	600	255	180	R2	R9	4392129	GS0009
128		→81	8	19	450	180	300	R21	R21		GS0003
128 Familiare		69→85	8	19	600	255	360	R2	R9	4392120, 5975342	GS0011
500		10/07→	8	19	460	170	350	R25	R25	51785412	GS0850
Brava		10/95→10/01	8	19	515	202	370	R21	R21	7769737, 46783650	GS0067
Bravo		10/95→10/01	8	19	470	196	350	R21	R21	7774707	GS0068
Bravo II		11/06→	8	19	510	213	360	R22	R22	51812267	GS0849
Cinquecento		07/91→01/98	8	19	569	242	210	R22	R22	46835404, 46453503	GS0080
Coupe (FA175)	R	11/93→08/00	8	19	673	276	250	R38	R38	46304290	GS1043
Croma (194)		06/05→	8	19	628	272	440	R22	R22	51734960, 0000051	GS0860
Croma		12/85→12/96	8	19	490	180	480	R2	R9	82429686	GS0043
Doblo		03/01→	8	19	240	74	300	R22	R22	46826216, 46773097	GS0398
Doblo (without Malibu)		03/01→	8	19	866	345	370	R2	R35	46824070, 46810696	GS0449
Ducato	- risable	5/81→03/94	10	22	798	350	500	R30	2d	4424045	GS0073
Duna Weekend (14R20)		01/87→12/91	8	19	527	219	520	R21	R21	7516691	GS0063
Elba		01/92→12/96	8	19	527	219	520	R21	R21	7516691	GS0063
Fiorino, Qubo		02/08→	8	19	600	225	670	R22	R22	1354844080	GS0921
Idea (135, 235)		12/03→	8	19	470	185	480	R28	R25	46830389, 004683	GS0768
Linea		06/07→	8	19	288,5	100	380	R25	R50	51801718	GS1017
Marea Weekend (185)		09/96→	8	19	508	210	420	R25	R25	46420780	GS0077
Multipla		04/99→	8	19	213	48	200	R25	R25	46559850, 46559858	GS0442
Multipla		04/99→	8	19	506	203	520	R22	R25	46514867	GS0372
Palio (178BX)		04/96→	8	19	477	188	360	R25	R25	46792437, 46530124	GS0463
Palio Weekend (178DX)		04/96→	8	19	519	200	570	R25	R25	46524047, 46524049, 46524051	GS0085
Panda (141A)		05/80→09/86	8	19	549	229,5	240	R2	R10	4483658	GS0016
Panda (141A)	up to Vet. 6314421/5370347	10/86→12/96	8	19	549	229,5	240	R2	R10	4483658	GS0016
Panda (141A)	from Vet. 6314422/5370348	10/86→12/96	8	19	550	229	380	R2	R10	7550172	GS0039
Panda (169)		09/03→	8	19	502	209	280	R25	R25	46827091	GS0100
Punto (176)		09/93→08/99	8	19	445	182	300	R21	R21	7734566	GS0078
Punto Cabrio (176C)		04/94→06/00	8	19	565	200	200	R25	R25	46720558, 46720558P5	GS0989
Punto Cabrio (176C)		04/94→06/00	6	15	155	40	400	R23	R23	46730681, 46730681C3	GS0990
Punto (188)	3	09/99→	8	19	472	180	330	R22	R22	46744596	GS0163
Punto (188)	5	09/99→	8	19	454	164	380	R22	R22	46524678	GS0164
R281 Familiare/Panorama		06/74→07/86	8	19	600	255	310	R2	R9	4418499	GS0042

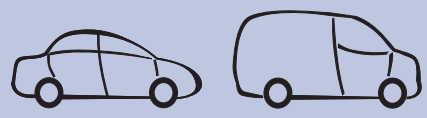

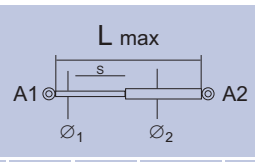

O.E.

MAGNETI MARELLI

FIAT

			Ø1 [mm]	Ø2 [mm]	L max	S [mm]	F [N]	A1	A2	O.E.	
R282		72→86	8	19	256	86	280	R2	R9	4405569	GS0018
R282	-	72→86	8	19	256	86	180	R2	R9	21083	GS0030
Regata Weekend		03/85→12/89	8	19	542	210	300	R22	R22	5981660	GS0041
Ritmo Bertone Cabrio		83→88	8	19	549,5	229,5	160	R2	R9		GS0054
Ritmo I		78→07/83	8	19	600	255	200	R2	R9	43912130	GS0010
Ritmo II		07/83→88	8	19	600	250	540		R35	39481770	GS0502
Ritmo II		07/83→88	8	19	600	255	360	R2	R9	4392120, 5975342	GS0011
Scudo Combinato (220P)		02/96→	10	22	700	172	1050	R22	R22	8731P5, 8731Q9	GS1044
Sedici		06/06→	8	19	445	160	420	R22	R22	71743352, 7174335	GS0844
Seicento		98→	8	19	569	242	210	R22	R22	46835404, 46453503	GS0080
Stilo (192)		10/01→	8	19	500	200	280	R22	R22	46784590	GS0038
Stilo (192)	3	10/01→	8	19	441,5	169	460	R21	R21	46784994	GS0279
Stilo (192)	5	10/01→	8	19	506	200	380	R21	R21	46784995	GS0280
Stilo Multiwagon	with decor	10/03→	10	22	603	198	810	R22	R22	51716995, 51736745	GS0536
Stilo Multiwagon	with decor and openable window	10/03→	10	22	603	198	850	R22	R22	51716996, 51736746	GS0537
Stilo Multiwagon	tailgates's window	10/03→	8	19	395	148	180	R22	R22	46812168	GS0382
Stilo Multiwagon	tailgate with window	10/03→	10	22	603	220	740	R22	R22	46762434, 51709681, 51736743, 51736744	GS0436
Strada		07/83→88	8	19	600	250	540	R3	R35	39481770	GS0601
Strada		78→07/83	8	19	600	255	200	R2	R9	39401990	GS0010
Strada		07/83→88	8	19	600	255	360	R2	R9	39462450	GS0011
Talento	- risable	03/89→03/94	10	22	798	350	500	R30	2d	4424045	GS0073
Tempra Station Wagon (159)		01/90→08/97	8	19	630	269	330	R21	R21	76063040	GS0281
Tipo	from Vet. 0043620, 2129640, 2162445, 4075920, 454677	03/93→04/95	8	19	584	234	280	R22	R22	7671700	GS0014
Tipo	up to Vet. 0043620, 2129640, 2162445, 4075920, 454677	07/87→03/93	8	19	595	235	280	R22	R22	7587706	GS0013
Tipo 160 AE.OA.5	-	88→	8	19	584	234	290	R22	R22	7671700	GS0065
Ulysse (179AX)		08/02→	8	19	631	230	440	R22	R22	1489342080	GS0459
Ulysse (220)		06/94→11/95	8	19	628	230	570	R21	R21	9626493880, 9622553680	GS0282
Ulysse (220)		11/95→08/02	8	19	609	200	560	R21	R21	9630698380	GS0303
Uno		1983→89	8	19	600	245	410	R22	R22	5993542	GS0012
Uno	FE.OA5 Restyling	→89	8	19	567,5	220	280	R21	R21	7636049	GS0049
Uno (146)		83→89	8	19	600	245	430	R22	R22	5993542	GS0064
Uno (146) Restyling		→89	8	19	569	220	280	R22	R22	7636049	GS0040
Escort III, IV		07/80→07/90	8	19	577	226	275	R25	R25	86ABB406A10GA	GS0464

MAGNETI MARELLI

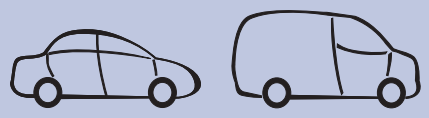

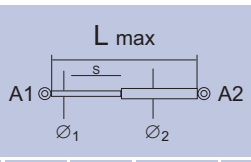

O.E.

MAGNETI MARELLI

			Ø1 [mm]	Ø2 [mm]	L max	S [mm]	F [N]	A1	A2	O.E.	
FORD											
Escort III, IV		07/80→07/90	8	19	577	226	320	R25	R25	86ABB406A10GA	GS0465
Escort III, IV		07/80→07/90	8	19	595	248	370	R21	R21	1650686, 81ABD406A10BB	GS0284
Escort III, IV		07/80→07/90	8	19	592	239	400	R21	R21	86ABW406A10CA, 81ABD406A10BA	GS0285
Escort V		08/90→05/92	8	19	534	216	410	R22	R22	91ABW406A10A1C, 91ABW406A10AF, 91ABW406A10AG, 6656800, 6885988	GS0160
Escort V		08/90→05/92	8	19	557	224	360	R22	R22	91ABA406A10A1D, 91ABA406A10A1E	GS0170
Escort V		08/90→05/92	8	19	557	224	425	R22	R22	91ABA406A10C1	GS0171
Escort VI, VII		05/92→09/00	8	19	544	207	495	R21	R21	93ABA406A10C1B, 91ABA406A10C1E, 6723080, 6900217	GS0108
Escort VI, VII		05/92→09/00	8	19	534	216	410	R22	R22	91ABW406A10A1C, 91ABW406A10AF, 91ABW406A10AG, 6656800, 6885988	GS0160
Escort VI, VII		05/92→09/00	8	19	544	210	440	R22	R22	93ABA406A10B1B	GS0251
Escort Cabrio (V, VI, VII)		07/90→08/00	8	19	285	104	230	R22	R22	1666591, V91ABL406A10AB	GS0991
Escort Cabrio (V, VI, VII)		07/90→08/00	8	19	431	100	400	R22	R22	V91ABL50600AA	GS0992
Escort XR3 RS Turbo		02/86→89	8	19	576,5	226	415	R22	R22	86ABB406A10HA	GS0199
Escort XR3 RS Turbo		01/89→07/90	8	19	576,5	226	400	R22	R22	89ABB406A10HA	GS0200
Escort XR3i		08/90→05/92	8	19	555	228	485	R22	R22	91ABW406A10C1C, 6723080	GS0172
Fiesta II		08/83→03/89	8	19	614	229	300	R25	R25	84FBB406A10CB	GS0466
Fiesta II		08/83→03/89	8	19	614	230	330	R22	R22	84FBB406A10BB	GS0023
Fiesta III		03/89→04/93	10	22	567	221	590	R22	R22	89FBB406A10A1C	GS0140
Fiesta III		03/89→04/93	10	22	567	221	650	R22	R22	89FBB406A10B1C	GS0141
Fiesta III		04/93→03/96	8	19	574	235	260	R22	R22	93FBB406A10AA	GS0142
Fiesta III		04/93→03/96	8	19	576	235	310	R22	R22	93FBB406A10BA	GS0146
Fiesta IV		01/96→10/01	8	19	576	235	310	R22	R22	96FBB406A10AA, 96FBB406A10BA, 1008276, 108277	GS0146
Fiesta V	3	11/01→	8	19	624	253	575	R22	R22	1218538, 1251915, 2S51B406A10AB, 2S51B406A10AC	GS0204
Fiesta V	5	11/01→11/02	8	19	600,5	180	425	R22	R22	1141159, 2S61B406A10AB	GS0205
Fiesta V	5	11/02→	8	19	599	190	440	R22	R22	1224731, 2S61B406A10AC	GS0206
Fiesta V		06/02→	8	19	557	205	500	R21	R21	1211497, 1212586, 2N11N406A10AD	GS0288
Fiesta VI		10/08→	8	19	544	218	290	R28	R22	1523356;8A61A406A10AB	GS0677
Focus		04/02→11/04	10	22	455	127	700	R22	R22		GS0407
Focus		11/04→	8	19	483	199	530	R22	R22		GS0408

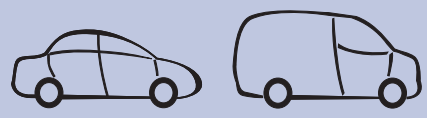

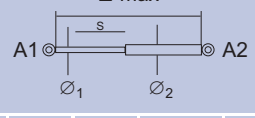

Ø1 [mm]	Ø2 [mm]	L max	S [mm]	F [N]	A1	A2	O.E.	

FORD

Focus II Cabrio		10/06→	8	19	490	189	560	R22	R22	1453743, 6N41L406A10AA, 9410495	GS0969
Focus (DAW, DBW)		10/98→02	10	22	465	140	655	R22	R22	1070024, 1074368, 1150277, 1150279, XS41A406A10AE, XS41A406A10AF	GS0223
Focus (DFW)		11/98→10/01	8	19	280	80	465	R25	R25	1071732, 1072394, 1092108, 1114031, XS41F406A10AC, XS41F406A10AD, XS41F406A10AE	GS0467
Focus (DFW)		10/01→	8	19	280	80	420	R25	R25	1124003, XS41-F406A10AF	GS0468
Focus (DNW)		11/98→01/01	8	19	511	200	550	R22	R22	1071669, 1079800, 1093705, XS41N406A10AD, XS41N406A10AE	GS0167
Focus (DNW)		01/01→	8	19	526	200	450	R22	R22	1R286483, 1146649, XS41N406A10AH, XS41N406A10AJ	GS0168
Focus C-MAX		10/03→	8	19	570	230	460	R21	R21	1252377, 1252806, 3M51R406A10AB	GS0287
Focus II Cabrio		10/06→	8	19	490	189	560	R22	R22	1453743, 6N41L406A10AA, 9410495	GS0969
Focus II Sedan (DA)		04/05→	8	19	280	90	510	R22	R22	1336159, 1376673, 5M51F406A10AA, 5M51F406A10AB	GS0851
Focus II Turnier (DAW)		11/04→	8	19	585	240	420	R22	R22	01349309, 1349309, 1336230, 4M51N406A10AB, 4M51N406A10AA	GS0729
Fusion		08/02→	8	19	557	205	500	R21	R21	1212586, 2N11N406A10AD	GS0288
Galaxy		06/95→	10	22	593	200	830	R22	R22	7300069, 1009060, 1047212, 1094814, 95VW442K0R23E, 95VW442K0R23G, 95VW442K0R23H	GS0126
Galaxy		05/06→	10	22	574	198	990	R28	R28	1434313, 1405189, 6M21U406A10AB, 6M21U406A10AC	GS0837
Ka		09/96→	8	19	448	180	310	R22	R22	1025425, 97KGB406A10AA	GS0135
Ka		10/08→	8	19	418,5	155	390	R25	R25	1542413; 51794232; 9551B460A10AA	GS0678
Kuga	rear window	03/08→	8	19	484	190	200	R28	R22	1520777; 8V41S406A10BB	GS0676
Kuga		03/08→	8	19	657	275	480	R22	R22	1537538; 8V41S406A10AD	GS0682
Mondeo I		02/93→08/96	8	19	552	200	515	R25	R22	93BBA406A10AD, 93BBA406A10AE	GS0125
Mondeo I		02/93→08/96	8	19	256	85	500	R21	R21	93BBF406A10AB	GS0289
Mondeo I		02/93→08/96	10	22	485	165	640	R22	R22	93BBN406A10AC	GS0330
Mondeo I		02/93→08/96	8	19	256	85	630	R22	R22	93BBF406A10BB	GS0423
Mondeo II		08/96→11/00	8	19	552	200	560	R25	R22	93BBA406A10BD	GS0174

MAGNETI MARELLI

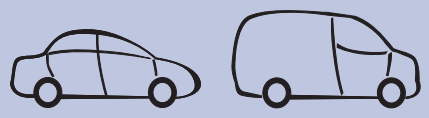

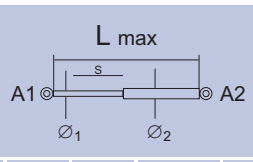

O.E.

MAGNETI MARELLI

FORD

		Ø1 [mm]	Ø2 [mm]	L max	S [mm]	F [N]	A1	A2	O.E.	
Mondeo II	08/96→11/00	8	19	256	85	500	R21	R21	93BBF406A10AB	GS0289
Mondeo II	08/96→11/00	10	22	485	165	640	R22	R22	93BBN406A10AC	GS0330
Mondeo III	11/00→	8	19	300	99	560	R25	R25	1117246, 1S71F406AD10AB	GS0503
Mondeo III	11/00→	8	19	534,5	198	485	R22	R22	1117046, 1S71A406AD10AC	GS0230
Mondeo III	with manual wiper 11/00→	8	19	534,5	198	520	R22	R22	1119688, 1S71A406A10AB	GS0231
Mondeo III	with automatic wiper 11/00→	8	19	534,5	198	585	R22	R22	1219986, 1S71A406A10CD	GS0232
Mondeo III	11/00→	10	22	250	74	660	R21	R21	1117690, 1120812, 1S7116C826AD	GS0328
Mondeo III	02→	8	19	548	2R28	475	R22	R22	1232189, 1S71N406A10AC	GS0368
Mondeo III	11/00→02	8	19	555	225	475	R22	R22	1117394, 1S71N406A10AB	GS0369
Mondeo IV	03/07→	10	22	556	224	715	R23	R23	1484371, 7S71A406A10BA	GS0862
Mondeo IV Sedan	03/07→	8	19	378	145	540	R23	R23	1496865, 7S71F406A10AF, 1484158	GS0770
Mondeo IV Turnier	03/07→	8	19	539	218	585	R23	R28	1477988, 7S71N406A10AD	GS0838
Orion II	without electrical opening 04/86→90	8	19	245	76	330	R2	R35	86ABF406A10AA, D83ABF406A10BA	GS0602
Puma	03/97→06/02	8	19	570	230	215	R22	R22	1034930, 1088369, V97FBC406A10AB, V97FBC406A10AC	GS0393
Puma	06/02→	8	19	570	230	215	R22	R22	1088369, V97FBC406A10AC	GS0393
Scorpio I	01/92→09/94	8	19	501	175	780	R22	R22	85GBA406A10DD	GS0603
Scorpio I	01/85→09/94	8	19	500	170	635	R21	R21	85GBA406A10CD	GS0109
Scorpio I	01/85→09/94	8	19	501	175	595	R21	R21	85GBA406A10BD	GS0290
Scorpio II	01/92→09/94	8	19	564	215	480	R22	R22	6962811, 1666983, 6186916, 96GBN406A10AF	GS0383
Scorpio II	10/94→08/98	8	19	550	220	285	R21	R21	7245797, 95GB16C826AB	GS0291
Scorpio II	10/94→08/98	8	19	564	215	480	R22	R22	6962811, 1666983, 6186916, 96GBN406A10AF	GS0383
S-MAX	05/06→	8	19	605	242	655	R28	R28	1381555, 1434296, 6M21R406A10AB, 6M21R406A10AD	GS0836
Sierra L, GL, GHIA	08/82→02/93	8	19	495	192	500	R22	R22	83BBA406A10AD	GS0079
Sierra L, GL, GHIA	08/82→02/93	8	19	496,5	192	565	R22	R22	83BBA406A10BD	GS0252
Sierra Sport	08/82→02/93	10	22	489	144	720	R22	R22	86BBA406A10BA, 86BBA406A10AA	GS0538
Sierra Turner	without laudspeakers 08/82→02/93	8	19	485	196	460	R21	R21	83BBN406A10AD	GS0292
Sierra Turner	with laudspeakers 08/82→02/93	8	19	485	196	520	R21	R21	83BBN406A10BB	GS0293
Sierra XR4, RS	08/82→02/93	10	22	490	144	780	R22	R22	88BBA406A10BAD, 83BBA406A10CD	GS0605

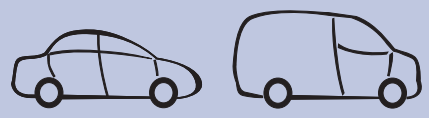

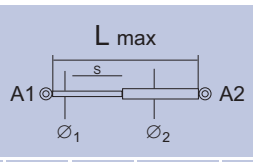

Ø1 [mm]	Ø2 [mm]	L max	S [mm]	F [N]	A1	A2	O.E.	

FORD

StreetKa		05/03→07/05	8	19	201	60	450	R25	R25	1225361, 3S51B406A10AA	GS0964
Transit		03/00→	10	22	850	340	670	R22	R22	4346105, 1C15V406A10AD, 1C15V406A10EA	GS0515
Transit		09/85→07/91	10	22	550	235	850	R21	R21	86VBV406A10CA	GS0075
Transit		03/00→	8	19	678	282	480	R21	R21	4378216, 2T14V406A10AB	GS0294
Transit		09/85→07/91	10	22	550	235	810	R22	R22	86VBV406A10BA	GS0421

HONDA

Civic III (EC, ED, EE)	3	09/87→09/91	8	19	635	225	200	R25	R25	74820SH3305	GS0558
Civic IV (EG)	3	10/91→11/95	8	19	464	166	160	R25	R25	74820SR3003	GS0559
Accord Tourer	without automatic opening	07/08→	10	22	524	212	540	R22	R28	74820TL4G01	GS1028
Accord Tourer	with automatic opening	07/08→	10	22	524	212	585	R22	R28	74820TL4G31	GS1029
Accord Tourer VIII (CM)	L	04/03→	14	28	342	105	1200	R56	R56	04741SEG900	GS0720
Accord VII CH		12/99→12/02	10	22	550	160	710	R23	R23	74820S1CE01, 74820S1CE018	GS0852
Civic IV (MA, MB)		10/91→11/95	8	19	516	205	425	R22	R22	74820ST3E02	GS0399
Civic V (MB)	5	01/97→02/01	8	19	517	200	460	R25	R25	74820ST3E51, 74820ST3E52, 74820ST3E01, 74820ST3E02	GS0213
Civic V Aerodeck (MC)		04/98→02/01	8	19	582	228	500	R25	R25	74820S1EE01	GS0121
Civic VI (EU, EP)		02/01→	8	19	501	195	400	R22	R22	74820S6DE02, 74870S6DE02	GS0366
Civic VI (EU, EP)	3	02/01→	8	19	568	213	360	R22	R22	74820S5SE01, 74870S5SE01	GS0390
Civic VI (EU, EP) (engines D14Z5, D16V2, D16W7, D17A2)	5	2001	8	19	502	195	400	R22	R28	04741S6A000	GS0606
Civic VII		09/05→	8	19	639	258	465	R23	R23	74820SMGE01, 74820SMGE02, 74820SMGE010C1, 74820SMGE021M1	GS0900
Concerto		10/90→03/95	8	19	680	270	390	R23	R23	74820SK3E20, GTS122, BHE38017	GS0509
Concerto		10/90→03/95	8	19	679	270	360	R22	R22	74820SK3E20, GTS120, BHE38025	GS0191
CR-V (ED)	tailgate window	10/95→	8	19	540	130	170	R23	R23	04741S10000	GS0448
CR-V II (RD)	rear window	03/02→09/06	8	19	355	135	115	R22	R25	74820SCA003, 74820SCA0031	GS0950
CR-V III		10/06→	10	22	625	210	510	R22	R28	74870SWAA01, 74820SWAA01	GS0708
CR-V III		10/06→	10	22	628	184	510	R22	R28	74870SWAA01, 74820SWAA01	GS0951
Jazz II (GD)		03/02→07/08	10	22	414	155	500	R23	R23	04741SAA000	GS0949

MAGNETI MARELLI

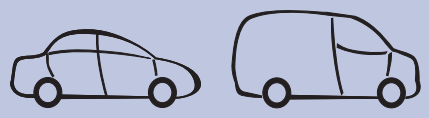

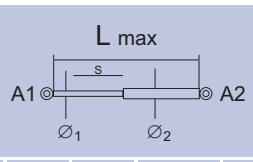

O.E.

MAGNETI MARELLI

HYUNDAI

			Ø1 [mm]	Ø2 [mm]	L max	S [mm]	F [N]	A1	A2	O.E.	
Accent (X-3)		10/94→01/00	10	22	539	200	450	R22	R22	8177022200, 8178022200	GS0156
Accent II (LC)		01/00→	8	19	577	190	530	R25	R51	8178025210, 8177025220, 8178025220	GS1003
Atos Prime (MX)		06/03→	8	19	449	160	470	R22	R25	8177006010	GS0953
Coupe (GK)		09/01→	8	19	544	210	490	R22	R25	817712C010, 817712C011	GS0373
Coupe (GK)		09/01→	8	19	544	210	530	R22	R25	817712C020, 817712C021	GS0374
Coupe (GK)		09/01→2008	8	19	447	175	300	R22	R22	811612C000	GS0879
Elantra (XD)		06/00→	8	19	485	185	580	R25	R25	817712D210	GS0560
Elantra (XD)		06/00→	8	19	486	187	610	R22	R25	817712D220	GS0375
Elantra (J2) Wagon		02/96→	8	19	521	197	435	R21	R21	8177129221	GS0295
Getz (TB)		08/02→	8	19	483	191	370	R23	R23	817701C000, 817701C001	GS0825
i10		01/08→	8	18,5	460,5	174	350	R22	R22	817700X000	GS0712
i20		09/08→	8	18,5	414	150	430	R22	R28	817801J000, 817701J000	GS0713
i30		10/07→	8	19	569	240	310	R22	R28	817712R000, 817812R000, 817711Z000	GS0952
i30 CW Estate		02/08→	8	18,5	512	198	460	R22	R22	817802L200, 817702L200	GS0707
ix55		09/08→	8	19	557	220	580	R22	R22	817703J000	GS0914
ix55		09/08→	8	19	436	154	245	R28	R22	811603J000	GS0919
Matrix (FC)		06/01→	8	19	570	200	630	R25	R22	8177017010, 8177017030	GS0607
Santa Fe (CM)	klapa bagażnika	03/06→	8	19	452	170	660	R22	R28	817702B001	GS0985
Santa Fe (SM)		02/01→	8	19	436	160	100	R21	R21	8717126010	GS0296
Santa Fe (SM)		02/01→	8	19	557	215	525	R22	R25	8177126010	GS0376
Santa Fe (SM)		02/01→	8	19	440	155	300	R22	R25	8116126000	GS0377
Santa Fe II (CM) 2.2		03/06→	8	19	441	175	300	R28	R22	811602B010	GS0714
Santa Fe II (CM) 2.7 V6		03/06→	8	19	441	175	300	R28	R22	811602B000	GS0714
Sonata IV (EF)		10/01→	8	19	490	187	380	R25	R25	811613D000	GS0561
Sonata IV (EF)		10/01→	8	19	298	83	500	R22	R22	817713D000, 817713D001, 817713D002	GS0153
Sonata V (NF)		01/05→	8	19	726,5	310	360	R28	R22	811613K000	GS0824
Sonata V (NF)		01/05→06/05	8	19	305	105	550	R22	R22	817713K000	GS0827
Sonata V (NF)		01/05→	8	19	726,5	310	360	R28	R22	811613K000	GS0824
Sonata V (NF)		01/05→06/05	8	19	305	105	550	R22	R22	817713K000	GS0827
Trajet (FO)		03/00→	10	22	570	240	650	R23	R23	817713A00, 817713A001	GS0881
Tuscon (JM)		08/04→2010	8	19	515	196	585	R28	R22	817712E000	GS0826
Tuscon (JM)	tailgate window	08/04→2010	8	19	385	150	140	R28	R22	871702E020	GS0828
XG (XG)		12/98→05	8	19	345	119	510	R22	R51	8177138500, 8177139501	GS1010

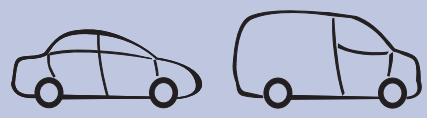

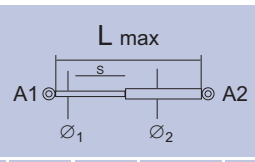

Ø1 [mm]	Ø2 [mm]	L max	S [mm]	F [N]	A1	A2	O.E.	MAGNETI MARELLI
INNOCENTI								
Elba	92→96	8	19	527	219	520	R21	R21	7516691	GS0063
Mille	→94	8	19	569	220	280	R22	R22	7636049	GS0040
Mille	→94	8	19	567,5	220	280	R21	R21	7636049	GS0111
Mini 90/120 serie I	74→82	8	19	520	213	230	R2	R9	53471007	GS0055
IŻ										
2126	→93	8	19	450	175	340	R21	R21	21086308015	GS0024
2126	→93	8	19	450	175	340	R21	R21	21086308010	GS0024
2717		8	19	450	175	340	R21	R21	21086308015	GS0024
2717		8	19	450	175	340	R21	R21	21086308010	GS0024
JEEP										
Cherokee	after lifting (use original mounting from the cylinder side)	97→2001	10	22	545	195	750	R22	R27		GS0583
Grand Cherokee II (WJ,WG)	10/98→09/04	8	19	285	105	460	R22	R22	55136764AA, 55352896AB, 55352897AB	GS0940
Grand Cherokee III	06/05→2010	8	18,5	505	205	F585	R28	R25	68025359AA	GS0704
Grand Cherokee III	tailgate window	06/05→	8	18,5	380	127	200	R55	R22	68025357AA	GS0717
Grand Cherokee III	06/05→	6	15	346	136	340	R22	R22	55394472AA	GS0718
KIA										
Carens II (FJ)	07/02→08/06	8	19	515	210	490	R22	R22	0K2FB62620, 0K2FB63620, 0K2FB62620A, 0K2FB63620A, 0K2FB62620B, 0K2FB63620B	GS0777
Carens III (UN)	09/06→	10	22	569,5	155	590	R22	R25	817701D010, 817801D010	GS1030
Carnival (FL)	07/02→09/05	8	19	395	158	440	R28	R22	0K53Y56620, 0K53Y56630, 0K53Z56620, 0K53Z56630, 0K53Z56620A, 0K53Z56620B, 0K53Z56630A, 0K53Z56630B	GS0772
Carnival (FL)	07/02→09/05	10	22	736,5	310	725	R22	R22	0K53Y62620, 0K53Y63620, 0K53Z62620, 0K53Z63620, 0K53Z62620A, 0K53Z63620A	GS0775
Cee'd (ED)	09/07→	10	22	390	148	800	R22	R41	817701H510, 817801H510	GS0903
Cee'd (ED)	12/06→	8	19	405	190	480	R25	R25	817801H010, 817801H010, 817701H010	GS0789
Cerato	03/04→2008	8	19	515	215	400	R22	R22	817702F210, 817802F210	GS0779
Magnetis (GD)	05/01→	8	19	299	109	550	R22	R22	817713C010	GS0776

MAGNETI MARELLI

			Ø1 [mm]	Ø2 [mm]	L max	S [mm]	F [N]	A1	A2	O.E.	MAGNETI MARELLI
					L max, S, A1, A2, Ø1, Ø2						
KIA											
Picanto (BC/SA)		04/04→2011	8	19	480	195	335	R22	R22	8177007000, 8178007000	GS0774
Rio (BN/TC)		03/05→	8	19	490	200	380	R28	R22	817701G000, 817801G000	GS0778
Sedona (FL)		07/02→09/05	8	19	395	158	440	R28	R22	0K53Y56620, 0K53Y56630, 0K53Z56620, 0K53Z56630, 0K53Z56620A, 0K53Z56620B, 0K53Z56630A, 0K53Z56630B	GS0772
Sedona (FL)		07/02→09/05	10	22	736,5	310	725	R22	R22	0K53Y62620, 0K53Y63620, 0K53Z62620, 0K53Z63620, 0K53Z62620A, 0K53Z63620A	GS0775
Sorento (FY/GB/F1/BL)		08/02→2009	8	19	565	240	290	R25	R22	811813E000, 811813E010, 811813E011	GS0771
Sorento (FY/GB/F1/BL)		08/02→2009	8	19	545	210	620	R22	R22	817713E011, 817713E020, 817813E011, 817813E020	GS0773
Sorento (FY/GB/F1/BL)	tailgate window	08/02→2009	6	15	362	138	100	R25	R25	871703E000, 871703E010, 871803E000, 871803E010	GS0888
Sportage (JE)		09/04→2010	8	19	567	195	550	R25	R22	OK01H62610E	GS0954
LADA											
2104	(without ball stud)	84→05	8	19	450	175	260	R21	R21	21216308010	GS0297
2107	(without ball stud)	82→05	8	19	450	175	260	R21	R21	21216308010	GS0297
2110	(with ball stud)	→96	8	19	450	175	260	R21	R21	21216308015	GS0025
2110	(without ball stud)	→96	8	19	450	175	260	R21	R21	21216308010	GS0297
2111	(with ball stud)	→97	8	19	450	175	260	R21	R21	21216308015	GS0025
2111		→97	8	19	602	252	430	R21	R21	21118231010	GS0106
2111	(without ball stud)	→97	8	19	450	175	260	R21	R21	21216308010	GS0297
2112	(with ball stud)	→99	8	19	450	175	260	R21	R21	21216308015	GS0025
2112		→99	8	19	450	170	460	R21	R21	21128231010	GS0107
2112	(without ball stud)	→99	8	19	450	175	260	R21	R21	21216308010	GS0297
Nadieżda 2120		→99	8	19	602	252	430	R21	R21	21118231015	GS0298
Niva 2121, 21211, 21212	(with ball stud)	77→94	8	19	450	175	260	R21	R21	21216308015	GS0025
Niva 212R28, 21214, 21215, 21216, 21217		→94	8	19	450	175	340	R21	R21	21086308010, 21086308015, 212R286308010, 212R286308015	GS0024
Niva 2R281		→94	8	19	450	175	340	R21	R21	21086308015, 212R286308015	GS0024
Oka 1111		→90	8	19	450	175	340	R21	R21	21086308015	GS0024
Samara 2108		84→03	8	19	450	175	340	R21	R21	21086308015	GS0024
Samara 2109		88→04	8	19	450	175	340	R21	R21	21086308015	GS0024
Samara II 2114		01→	8	19	450	175	340	R21	R21	21086308015	GS0024

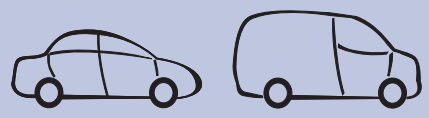

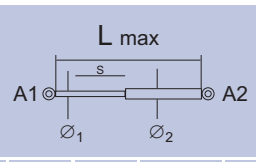

			Ø1 [mm]	Ø2 [mm]	L max	S [mm]	F [N]	A1	A2	O.E.	
LADA											
Samara II 21R28		00→	8	19	450	175	340	R21	R21	21086308015	GS0024
LANCIA											
Dedra (835)		01/89→07/99	8	19	268	83,5	450	R36	R36	82437256	GS0608
Dedra SW (835)		10/94→07/99	8	19	526	202	390	R21	R21	46725028	GS0299
Delta I (831)		09/79→05/93	8	19	505	180	430	R36	R36	82336687	GS0609
Delta II (836)		05/93→08/99	8	19	365	135	620	R25	R25	46433702	GS0437
Delta II (836)		05/93→08/99	10	22	364	130	800	R25	R25	82473205	GS0539
Delta III (844)		09/08→	8	18,5	644	265	300	R22	R28	51809199	GS0690
Kappa (838)		08/94→10/01	8	19	575	230	440	R25	R25	82486283	GS0483
Kappa (838A)		08/94→10/01	8	19	280	95	500	R25	R25	46429507	GS0484
Kappa SW (838B)		07/96→10/01	8	19	568	215	410	R25	R25	46309135	GS0540
Lybra (839)		07/99→	8	19	400	150	280	R25	R25	46763101	GS0485
Lybra (839AX)		07/99→	8	19	294	100	380	R21	R21	46428438	GS0300
Lybra (839BX)		07/99→	8	19	385	138	560	R21	R21	46453835	GS0301
Musa (184)		10/04→	8	19	470	185	480	R28	R25	46830389	GS0768
Pherda (179)		08/02→	8	19	631	230	440	R22	R22	1489342080	GS0459
Prisma (831)		03/83→06/89	8	19	330	116	340	R36	R36	82380453	GS0610
Ypsilon		10/03→2010	8	19	480	190	420	R28	R22	46817935	GS0769
Y10 (156)		03/85→12/95	8	19	602	250	160	R25	R25	60617400, 7703325, 5970097	GS0138
Y11 (840A)		04/95→	8	19	485	190	320	R25	R25	7792951	GS0158
Z (Zeta) (220)		06/94→11/95	8	19	628	230	570	R21	R21	9618278480, 1479303080	GS0302
Z (Zeta) (220)		11/95→08/02	8	19	609	200	560	R21	R21	9630698380	GS0303
LAND ROVER											
Range Rover Classic C		07/70→86	8	19	498	196	225	R21	R21	MXC7833	GS0304
Range Rover II (LP)		07/94→07/02	8	19	405	160	300	R22	R22	ALR1050	GS0675
Discovery III (TAA)		07/04→	8	19	480	185	480	R25	R25	BHE780012, 5H22406A10BA, 32031392	GS0932
Discovery III (TAA)		07/04→	6	15	400	160	230	R25	R25	BKK780010, 5H2216E610AA, 32030483	GS0942
Freelander 2 (FA)		10/06→	8	19	538	220	510	R25	R25	LR002104, 6H52406A10AF	GS0947
Freelander 2 (FA)		10/06→	8	19	319,5	120	410	R22	R22	LR001773, 6H5216C826BD	GS0948
Range Rover III (LM)		03/02→	8	19	516,5	150	580	R25	R25	BHE760020, XH42406A10AA, 32028398	GS0935
Range Rover III (LM)		03/02→	8	19	292	88	410	R25	R25	BKK760010, XH4216E610AA	GS0944
Range Rover Sport (LS)		02/05→	6	15	400	160	230	R25	R25	BKK780010, 5H2216E610AA, 32030482	GS0942

MAGNETI MARELLI

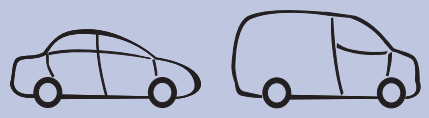

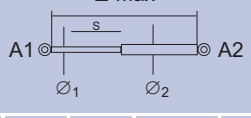

Ø1 [mm]	Ø2 [mm]	L max	S [mm]	F [N]	A1	A2	O.E.	MAGNETI MARELLI

LEXUS

GS (GWS,GRS,UZS)		04/05→2012	8	19	314	92	485	R25	R50	645300W091, 645300W090	GS1007
GS (GWS,GRS,UZS)		04/05→2012	8	19	516	184	160	R25	R25	534500W071, 534400W091, 534400W090, 534500W070	GS1008
IS I (GXE10)		04/99→2005	8	19	456	182	185	R25	R25	534500W080, 534400W100, 534400W101, 534500W081	GS1009
IS II (XE2,SE2)		10/05→	8	19	456	182	185	R25	R25	534500W080, 534400W100, 534400W101, 534500W081	GS1009

MAZDA

2 (B2W)		04/03→2007	8	19	565	220	500	R23	R23	DD1062620, DD1063620	GS0831
2 (DE)		06/07→	8	18,5	514	180	F1-335	R22	R28	D65162620	GS0706
3 (BK12)		10/03→2009	8	19	252	85	425	R22	R22	BN8W56930, BN8W56930B	GS0830
3 (BK14)		10/03→2009	8	19	540	225	390	R23	R23	BP4K62620D, BP4K63620D, BP4K62620F, BP4K63620F	GS0829
6 (GG)		06/02→	8	19	287	89	450	R22	R41	GJ6A56930, GJ6E56930	GS1002
6 (GG, GY)		08/02→	8	19	580	201	510	R22	R22	GJ6J62620, GJ6J63620	GS0748
6 (GG, GY) SW		07/02→2007	8	19	515	190	490	R22	R22	G21B62620A, G21B63620A	GS0749
6		08/07→	8	18,5	273	85	420	R22	R22	GS1D56930C	GS0705
6 (GH)		08/07→	10	22	496	180	635	R28	R28	GS1M63620C	GS0711
6 (GH)		02/08→	10	22	515,5	205	610	R25	R25	GS2A63620C	GS0719
121 (JASM, JBSM)		03/96→	8	19	576	235	310	R22	R22	96FBB406A10BA	GS0146
323 III (BF)	R	07/85→09/89	8	19	667	215	375	R22	R22	B1287F26	GS0541
323 VI (BJ)	L	09/98→05/04	10	22	587	230	340	R25	R58	B28C63620C	GS0905
323 VI (BJ)	R	09/98→05/04	10	22	587	230	340	R25	R59	B28C62620B	GS0906
626 V (GF)	R	05/97→10/02	10	22	610	240	570	R49	R54	GE4V62620D	GS0911
626 V (GF)	L	05/97→10/02	10	22	610	240	570	R48	R53	GE4V63620D	GS0912
MX-5 III (MC)		03/05→	8	19	238	62	165	R22	R22	NF7956930B, NF8056930B	GS0875
RX-8 (SE17)		10/03→	8	19	232,5	65	305	R22	R22	FE1556930C	GS1031

MERCEDES - BENZ

190/190E (W 201)		10/82→08/93	8	19	788	342	280	R2	R20	0009802464, 0009802564, 0009803764	GS0101
A (W168)		07/97→	8	19	539	210	370	R22	R22	1689800164, 1689800964	GS0185
A (W168)		02/01→	8	19	541	214	370	R22	R22	1689801164	GS0186
A (W168)		07/97→	8	19	541	214	400	R22	R22	1689801264	GS0187
A (W169)		09/04→	8	19	497	200	430	R28	R22	1697400345	GS0783

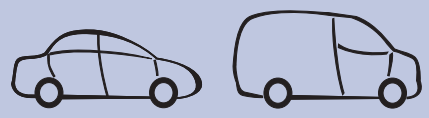

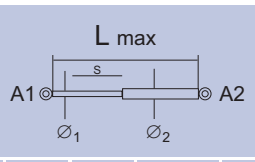

Ø1 [mm]	Ø2 [mm]	L max	S [mm]	F [N]	A1	A2	O.E.	

MERCEDES - BENZ

B (W245)		03/05→	10	22	547	220	460	R22	R22	1699800864, 1699800964	GS0784
C (S202)		03/96→03/01	8	19	484	189	450	R21	R21	2029800364	GS0305
C (S203)		03/01→	8	19	512	200	470	R25	R25	2037400045	GS0469
C (W203) (S203) (CL203)	R	05/00→	8	19	570	200	280	R22		2038800029	GS0568
C (W203) (S203) (CL203)	L	05/00→	8	19	535	200	280	R22		2038800429	GS0569
C (CL203)		03/01→2006	8	19	582	203	460	R22	R22	2039800164	GS0738
C (S204)		08/07→	8	19	475	175	510	R22	R28	2047400145	GS0785
C (W204) (S204)		01/07→	8	19	650	270	350	R22	R22	2049800064	GS0781
C (CL203)		03/01→2006	8	19	582	203	460	R22	R22	2039800164	GS0738
C (S204)		08/07→	8	19	475	175	510	R22	R28	2047400145	GS0785
C (W204) (S204)		01/07→	8	19	650	270	350	R22	R22	2049800064	GS0781
CLK (A208)(C208)		06/97	8	21	450	170	490	R21	R21	2088800029	GS0306
C (CL203)		03/01→2006	8	19	582	203	460	R22	R22	2039800164	GS0738
C (S204)		08/07→	8	19	475	175	510	R22	R28	2047400145	GS0785
C (W204) (S204)		01/07→	8	19	650	270	350	R22	R22	2049800064	GS0781
E (W210)(S210)		05/95→03/03	8	19	459,5	180	535	R25	R25	2108800229, 2108800429	GS0430
E (W211)(S211)		03/02→	8	19	675	285	260	R21	R21	2118800029	GS0307
E (S210)		06/96→03/03	14	28	325	100	1400	R25	R25	0019808064	GS0739
E W210		06/96→03/02	14	28	325	100	1400	R25	R25	19808064	GS0739
E Cabrio (A124)		06/93→03/98	6	15	289	113	350	R25	R46	A1247500036	GS0998
E T-MODEL (S211)	with automatic opening	03/03→	10	22	347,5	91,5	1300	R23	R23	2119800464, A2119800464, 2119800364	GS1005
M (W164)	L	07/05→	8	19	533	216	330	R28	R52	1648800029	GS0981
M (W164)	R	07/05→	8	19	570	254	330	R28	R52	1648800129	GS0980
M (W164)	without remote controlled clock	07/05→	10	22	560	178	725	R22	R28	1647400145, 16474	GS0871
R (W251,V251)		01/06→	10	22	312,5	75,5	1450	R23	R23	2517400045	GS1004
R (W251,V251) L		01/06→	8	19	394	149	400	R22	R52	2518800129	GS0982
R (W251,V251)R		01/06→	8	19	453	138	400	R22	R52	2518800229	GS0983
S (W220)		10/98→08/05	8	19	580	205	230	R22	R22	A2208800329, 2208800329	GS0611
S (W220)		10/98→08/05	8	19	397	158	295	R25	R45	2207500136	GS0973
S (W221)		12/05→	8	22	301	92	730	R22	R52	2218800329	GS0984
S (W221)		10/05→	6	15	297	113	240	R25	R25	2217500236, 22175	GS0878
SL (R230)	up to chassis no. F 122820	10/01→2006	8	19	333	117	650	R22	R22	2307500036	GS0865
SL (R230)	from chassis no. F 109966 without remote	10/01→2006	8	19	415	160	530	R22	R22	2309800164	GS0866
SL (R230)	from chassis no. F 109966 with remote controlled clock	10/01→2006	8	19	418	163	490	R22	R22	2309800264	GS0867
SL (R230)		10/01→2006	8	19	323	103	700	R22	R22	2308800029	GS0876
SL (R129)		03/89→10/01	6	15	242	74	325	R25	R46	A1299800664	GS0971
SLK (R170)		04/96→04/04	8	19	365,5	130	440	R22	R22	1707500036	GS0745
SLK (R170)		09/96→04/04	10	22	874	404	260	R22	R52	1708800229	GS0979
SLK (R171)	L	03/04→	8	19	674	293	300	R22	R22	1718800129	GS0863

MAGNETI MARELLI

			Ø1 [mm]	Ø2 [mm]	L max	S [mm]	F [N]	A1	A2	O.E.	
MERCEDES - BENZ											
SLK (R171)	R	03/04→	8	19	674	293	330	R22	R22	1719800164	GS0864
SLK (R171)		03/04→	8	19	282	98	560	R22	R22	1717500036	GS0883
V (W638)		02/96→	10	27	772	322	630	R22	R22	6389800364	GS0612
V (W638)		02/96→	10	27	775	322	530	R22	R22	6389800464	GS0613
V (W638)		02/96→	10	22	775	322	530	R21	R21	6389800464	GS0326
V (W638)		02/96→	10	22	772	322	630	R21	R21	6389800364	GS0327
Vaneo (V414)		02/02→	8	19	695	272	640	R22	R22	4149800064	GS0542
Viano (W639)		09/03→	10	22	667	255	755	R22	R22	6399800364	GS0782
Vito (W639)		09/03→	10	22	667	255	755	R22	R22	6399800364	GS0782
Vito (638)		02/96→	10	22	775	322	530	R21	R21	6389800464	GS0326
Vito (638)		02/96→	10	27	772	322	630	R21	R21	6389800364	GS0327
MG											
Metro		→80	8	19	542	210	300	R22	R22	AFP1282	GS0041
ZR		06/01→	8	19	599	220	360	R22	R22	BHE45001, BHE450030	GS0426
ZS		07/01→	8	19	515	200	445	R25	R25	BHE140010	GS0443
ZS		07/01→	8	19	515	200	490	R25	R25	BHE140020	GS0614
ZT		06/01→	8	19	314	105	370	R25	R22	BMH500010	GS0404
ZT-T	tailgate window	10/01→	8	19	398	120	180	R25	R25	BHE500070	GS0615
ZT-T	with window that can be opened	10/01→	8	19	565	210	560	R25	R22	BHE500050	GS0405
ZT, ZT-Tourer		01→05	8	19	338	119	420	R22	R22	BKK500010	GS1024
MINI											
Clubman (R55)	tailgate	10/07→	8	18,5	386,5	145	160	R28	R28	51247167442	GS0703
One/ Cooper		06/01→	8	19	497	197	330	R22	R22	41626801258	GS0400
One / Cooper / Works (R52)		07/04→	8	19	577	225	270	R22	R28	51237175020	GS0671
Mini / Clubman /Cabrio (R55,R56,R57)		10/06→	8	19	241	76	700	R22	R51	51237148864	GS1022
MITSUBISHI											
Carisma (DA)		07/95→	8	19	570	230	490	R21	R21	MB927791	GS0350
Carisma (DA)		07/95→	8	19	569	240	490	R21	R21	MR101555	GS0277
Carisma (DA)		07/95→	8	19	570	230	490	R22	R22	MB927791	GS0350
Colt IV (CAA)		04/92→04/96	8	19	459	172	230	R25	R25	MR138596	GS0579
Colt VI	2	06/04→2008	8	19	440	170	470	R22	R22	MR959243	GS0724
Colt VI	4	06/04→2008	8	19	590	245	460	R22	R22	MR959247	GS0725
Galant IV (E3A) GTI 16V		11/88→12/92	8	19	650	250	460	R22	R22	MB926947	GS0570
Lancer		09/03→2008	8	19	473	182	540	R22	R22	MR991807, MR991808	GS0823
Outlander I		05/03→2006	8	19	473	182	540	R22	R22	MR991807, MR991808	GS0823
Outlander II		02/07→	8	19	495	197	420	R22	R28	5802A007, 5802A008, 8731Q1	GS0841
Pajero Sport (K90)		1996→2008	10	22	468	180	610	R38	R38	MR526933	GS1033

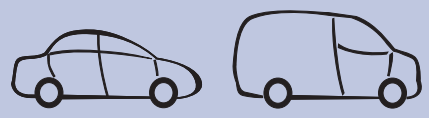

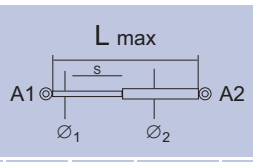

			Ø1 [mm]	Ø2 [mm]	L max	S [mm]	F [N]	A1	A2	O.E.	
MITSUBISHI											
Space Star (DG0)		06/98→	8	19	555	220	450	R21	R21	MR248939, MR248940	GS0349
Space Wagon (N5 W)		10/98→	10	22	500	175	630	R23	R23	MR415173, MR415174	GS0978
MOSKWICZ											
2141		86→98	8	19	502	200	400	R21	R21	21416306206	GS0004
2335		→86	8	19	502	200	400	R21	R21	21416306206	GS0004
NISSAN											
Almera Tino (V10)		08/00→	8	19	523	202	530	R25	R25	90450BU000, 90450BU000	GS0571
Almera II (N16)		03/00→2006	8	19	540	210	385	R22	R22	90450BM400, 90450BM425	GS0737
Kubistar (X76)		08/03→	8	19	690	300	630	R23	R23	7700303186, 7700308167, 8465124	GS0901
Maxima QX (A32)		01/95→08/00	8	19	390	165	410		R23	6547040U10, 6547140U10	GS0616
Micra (K11)		1992→2002	8	19	549	219	290	R22	R22	904504F111, 904504F110	GS0955
Micra (K12)		01/03→	8	19	500	190	360	R21	R21	90450AX000, 90450AX610, 90451AX000	GS0356
Nadbudówka samochodu NISSAN	Flap of additional storey		8	19	440	175	175	R25	R25		GS0116
Note (E11)		03/06→	8	19	590	176	435	R25	R22	904509U00A	GS0767
Pathfinder (R50)	tailgate window	9/97→12/04	8	19	480	173	135	R22	R22	904601W301, 904606W560	GS0766
Pathfinder (R50)		9/97→12/04	10	22	535	183	710	R22	R25	904501W302, 904501W312	GS0846
Primera (P10) EC4		06/90→06/96	10	22	273	92	680	R23	R23	8443090J00	GS0525
Primera (P10) EC4		06/90→06/96	10	22	273	92	720	R23	R23	8443090J10	GS0526
Primera (P10) EC4		06/90→06/96	8	19	591	215	410	R21	R21	904523F201	GS0315
Primera (P10) EC4		06/90→06/96	8	19	590	215	450	R21	R21	904523F200	GS0316
Primera (P10) EC4	with additional STOP light	06/90→06/96	8	19	590	220	480	R21	R21	904523F202, 9045298J26	GS0322
Primera (P11) EQ4		06/96→03/02	8	19	314	100	420	R21	R21	844302F010, 844309F500	GS0319
Primera (P11) EQ4		06/96→03/02	8	19	314	100	465	R21	R21	844302F000	GS0320
Primera (P11) EQ5		06/96→03/02	8	19	520	185	730	R22	R22	904522F715, 904526F126	GS0572
Primera (P11) EQ5		01/99→03/02	8	19	520	180	670	R25	R25	904529F725	GS0415
Primera (P11) EQ5		06/96→03/02	10	22	520	180	665	R22	R22	904522F705, 904522F725, 904526F100	GS0425
Primera (P12)		07/02→	8	19	527	180	575	R25	R25	90452AU200	GS0085
Primera (P12)		03/02→	8	19	268	78	510	R21	R21	84430AV600	GS0348
Primera Traveler (W10)		07/90→03/98	10	22	559	220	330	R25	R25	9045079N02	GS0580
Primera Traveler (WP11)		04/98→07/02	8	19	527	200	660	R22	R22	904528F825	GS0573
Primera Traveler (WP12)		03/02→	8	19	472	175	590	R25	R22	90452AV700	GS0406
Serena (C23M) LX	L	11/92→	10	22	769	247	475	R22		904519C104	GS0574
Qashqai (J10,JJ10)		02/07→	8	19	515	210	365	R25	R25	90450JD01B	GS0956

MAGNETI MARELLI

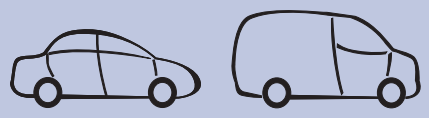

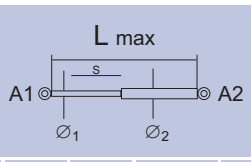

O.E.

MAGNETI MARELLI

			Ø1 [mm]	Ø2 [mm]	L max	S [mm]	F [N]	A1	A2	O.E.	
NISSAN											
Sunny II Traveler (B12)		06/86→06/91	8	18	765	325	235	R21	R21	9045055A10	GS0403
Sunny III traveller (Y10)		06/91→03/00	10	22	600	220	325	R25	R25	9045073R00	GS0986
X-Trial (T30)	L	06/01→03/07	8	19	536	204	410	R25	R25	90450EQ30A, 90450EQ31A, 90450EQ325, 90450EQ300, 90451EQ30A, 90451EQ31A, 90450EQ325, 90450EQ301	GS0874
OPEL											
Agila (H00)		02→07	8	19	643	204	475	R25	R25	4708557, 93193386, 8186083E10X10, 8186084E00	GS1034
Antara		05/06→	8	19	585,5	235	510	R23	R23	96830123, 96661403, 4809275	GS0939
Antara		05/06→	8	19	431	173	320	R22	R22	96664104, 4808912	GS0995
Agila	R	04/00→	8	19	645	202,6	470	R32	R33	9209569, 4705436, 9210307, 4705684	GS0087
Agila	L	04/00→	8	19	645	202,6	470	R32	R33	9209570, 4705437, 9210308, 4705685	GS0088
Ascona C		09/81→10/88	8	19	507,5	194	350	R22	R22	90195260	GS0384
Ascona C		09/81→10/88	8	19	510	208	440	R22	R22	90158125	GS0385
Ascona C		09/81→10/88	8	19	510	208	390	R22	R22		GS0389
Astra Classic	3 5	09/91→01/98	8	19	591	242	350	R22	R22	90341282	GS0076
Astra Classic		03/98→	8	19	508	195	550	R22	R22	90341377, 132720	GS0155
Astra F	3 5	09/91→01/98	8	19	591	242	350	R22	R22	90341282	GS0076
Astra F	with loudspeakers	09/91→01/98	8	19	508	195	600	R22	R22	90341378, 132719	GS0124
Astra F	without tailgate loudspeakers	09/91→01/98	8	19	508	195	550	R22	R22	90341377, 132720	GS0155
Astra F Cabrio (53 B)		01/91→09/98	8	19	283	87	400	R25	R25	90486893, 176604	GS0994
Astra G		01/98→03/04	8	19	566	204	500	R22	R22	90559245, 132739	GS0137
Astra G	3 5 without ver. OPC, ECO, SPORT, SRI	01/98→03/04	8	19	537	205	430	R22	R22	90521517	GS0165
Astra G	3 for ver. OPC, ECO, SPORT, SRI	01/98→03/04	8	19	534,5	215	480	R22	R22	24411022	GS0166
Astra H		03/04→	8	19	424,5	165	450	R22	R22	132743, 132743, 24463829	GS0734
Astra H GTC	3 sport type	03/05→	8	19	479	179	340	R28	R22	132532, 13220159	GS0870
Astra H kombi		08/04→	8	19	474	190	570	R22	R22	132757, 13122695	GS0787
Astra H Twin Top		09/05→	8	19	405	160	480	R25	R25	13243589	GS0789
Astra H, H GTC, H Twin Top		03/04→	8	19	543	220	310	R22	R22	1180405, 24465295	GS0786
Calibra		03/90→08/97	8	19	568	183	430	R21	R21	90346469	GS0363
Combo Tour		06/01→2011	10	22	598	186	700	R22	R25	5132267, 91163328	GS0993
Corsa A		09/82→03/93	10	22	613,5	248	620	R39	R39	90127137, 132713, 90138517, 132696	GS0528

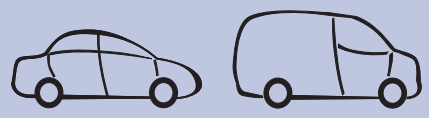

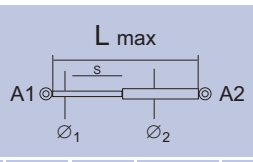

O.E.

OPEL

			Ø1 [mm]	Ø2 [mm]	L max	S [mm]	F [N]	A1	A2	O.E.	
Corsa A		09/82→03/93	8	19	613,5	248	560	R39	R39	90127136, 132712, 90119276, 132694	GS0577
Corsa A		09/82→03/93	8	19	613,5	248	640	R39	R39	90127138, 132714, 90138518, 132695	GS0578
Corsa B	3	03/93→09/00	8	19	543,5	206	360	R21	R21	90481270	GS0053
Corsa B	5	03/93→09/00	8	19	565	216	360	R22	R22	90388707	GS0143
Corsa B	3	03/93→09/00	8	19	544	206	320	R22	R22	90481269	GS0241
Corsa C		09/00→	8	19	475	196	350	R21	R21	9114311	GS0119
Corsa D	5	07/06→	8	19	609,5	251,5	245	R22	R22	176413, 13182309	GS0872
Corsa D	3	07/06→	8	19	603	255	240	R22	R22	176414, 13182537	GS0892
Frontera B	spare tyre bracket	10/98→2003	8	19	500	230	135	R25	R25		GS0890
Frontera B (6B)	rear window	10/98→2004	8	19	499	145	190	R22	R22	132673, 97211748	GS0664
Insignia		07/08→	8	19	500	146	660	R22	R22	176105, 13246577, 176124	GS0915
Insignia Sports Tourer R	with automatic opening	07/08→	8	30	652	218	750	R22	R22	176676, 13247949	GS0987
Insignia Sports Tourer R	without automatic opening	07/08→	10	22	661	260	800	R22	R22	132020, 13332885, 13278257, 176541	GS0988
Insignia		07/08→	8	19	721,5	313	180	R22	R22	1180016, 13252173	GS0728
Kadett E		09/84→08/91	8	19	549	232	355	R22	R22	90159607	GS0031
Kadett E		09/84→08/91	8	19	550	232	320	R22	R22	90191920	GS0242
Kadett E		09/84→08/91	8	19	550	232	410	R22	R22	90191627	GS0243
Kadett E	from Vat. J2502493- JE100001-	08/87→08/91	8	19	700	257	320	R22	R22	90241996 (90241995 wihout wiper)	GS0401
Kadett E	to Vet.- J2502492 -JE100000	09/84→08/87	10	22	699	257	610	R40	R39	90159629, 132706	GS0898
Kadett E	to Vet.- J2502492 -JE100000	09/84→08/87	10	22	699	257	540	R40	R39	90196023, 132734	GS0899
Meriva		05/03→	8	19	540	196	540	R21	R21	5132262, 93386999	GS0118
Omega A	from Vet. -N1145949	01/91→02/94	8	19	364	R285	180	R21	R21	90275102, 176603	GS0361
Omega A	up to Vet. -N1145948	01/86→01/91	8	19	364	R285	240	R21	R21	90275080, 176602, 90275073, 176601	GS0362
Omega A		01/86→02/94	8	19	511	199	520	R22	R22	90246621 (90246620 without speakers)	GS0402
Omega B		02/94→07/03	8	19	510	202	620	R22	R22	90379081	GS0102
Omega B		02/94→07/03	8	19	440,5	158	370	R22	R22	90379054, 176605	GS0209
Record B		08/77→08/86	8	18	580	245	340	R21	R21	90043132, 138682	GS0392
Record B	L	08/77→08/86	8	18	580	245	340	R22	R22	90043132, 138682	GS0392
Senator B	from Vet. N1145949-	01/91→09/93	8	19	364	R285	180	R21	R21	90275102, 176603	GS0361
Senator B	up to Vet. -N1145948	09/87→01/91	8	19	364	R285	240	R21	R21	90275080, 176602	GS0362
Signum		05/03→	8	19	649,5	270	310	R21	R21	24454473, 1178224	GS0341
Signum		05/03→2008	10	22	482	185,5	700	R28	R22	176609, 9180256, 13191401, 13247868	GS0882
Sintra		11/96→04/99	10	22	725	210	819	R22	R22	10233373, 132730, 10400855, 132737, 10233372, 1 32 729, 10400854, 132736, 10324007, 132674	GS0516
Tigra	L D534	07/94→12/00	8	19	8 28	249	355	R21	R21	90481180	GS0364

MAGNETI MARELLI

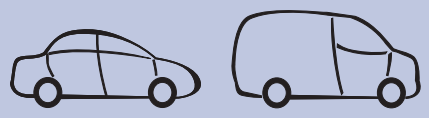

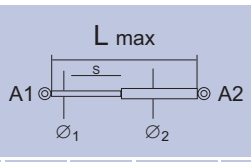

O.E.

			Ø1 [mm]	Ø2 [mm]	L max	S [mm]	F [N]	A1	A2		
OPEL											
Vectra A		04/88→09/95	8	19	473	188	530	R21	R21	90227936	GS0032
Vectra A		91→09/95	8	19	473	184	570	R22	R22	90227934	GS0257
Vectra B	up to Vet. W5999999-W7999999	10/95→98	8	19	469,5	171	560	R21	R21	90463749	GS0081
Vectra B		10/95→04/02	10	22	249	67	850	R21	R21	90463721, 1180402	GS0084
Vectra B	from Vet. X1000001-	10/95→04/02	6	15	305,5	121	45	R25	R25	90463253, 176387	GS0177
Vectra B	from Vet. X1000001-	98→04/02	8	19	470	182	600	R22	R22	9152393	GS0256
Vectra B		10/95→04/02	8	19	567	193	540	R22	R25	90463781	GS0416
Vectra C		04/02→	8	19	264	80	520	R21	R21	9177081, 176607	GS0337
Vectra C		04/02→	8	19	649,5	270	310	R22	R21	24454473, 1178224	GS0341
Vectra C	closed manually	04/02→	8	19	571	208	570	R22	R22	13101335, 132691	GS0342\
Vectra C GTS	sport type	08/02→2008	8	19	475	195	640	R22	R22	0176608, 09180255, 176608, 13241974, 176608	GS0839
Vivaro		08/01→	10	22	905	307	730	R23	R23	91168256, 4414419	GS0517
Zafira		04/99→	10	22	535	176	630	R22	R22	90579440, 132742	GS0136
Zafira B		07/05→2010	10	22	505	205	610	R22	R22	132749, 13128759	GS0788
PAZ (ПАЗ)											
3205			8	19	450	175	340	R21	R21	21086308010	GS0024
PEUGEOT											
106 I		01/91→04/96	8	19	600	250	250/310	R22	R22	873185, 873186, 9605478880, 9605478888	GS0132
106 II		05/96→	8	19	585	222	280	R22	R22	873191	GS0133
106 II		05/96→	8	19	685	285	150/180	R22	R22	792506	GS0267
107		04/05→	8	19	555	228	305	R22	R22	689500H020, 8731L0	GS0753
205 I, 205 II		02/82→07/96	8	19	600	230	290	R22	R22	9256119680	GS0020
206		09/98→	8	19	510	210	340	R25	R25	8731E6, 51023704	GS0145
206 CC		09/00→	8	19	448	180	590	R21	R21	8731F2, 9637115080	GS0339
206 SW		07/02→	8	19	580	210	535	R25	R25	8731G5, 9642209980	GS0470
206 SW	tailgate's window	07/02→	8	19	525	210	140	R21	R21	8731G4, 9642210080	GS0336
207 (WA, WC)		02/06→	8	19	505	211	330	R25	R28	8731L7	GS0797
207 CC (WD)		02/07→	8	19	631	265	455	R25	R25	8731S7	GS0918
207 SW (WK)		06/07→	8	19	505	195	490	R25	R25	8731P9, 8731Q0	GS0798
207 SW (WK)	tailgate window	06/07→	6	15	435	180	105	R25	R25	8731P8	GS0799
305 Break I, 305 Break II		08/80→12/88	8	19	636	248	360	R21	R21	873148, 873149, 7920071833	GS0360
305 I, 305 II		02/78→09/87	10	22	265	80	820	R22	R22	862215, 9255607980	GS0620
306 (R22)		06/94→04/01	8	19	284	95	290	R21	R21	8731A2, 9617046480	GS0321
306 (R22/C)		06/94→04/01	8	19	600	230	300/360	R22	R22	873193, 9610016680, 9619988380	GS0147

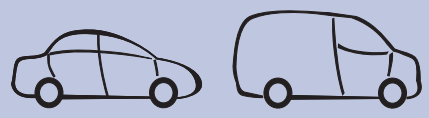

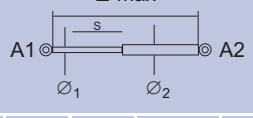

O.E.

			Ø1 [mm]	Ø2 [mm]	L max	S [mm]	F [N]	A1	A2		
PEUGEOT											
306 Break (7E)		05/97→04/01	8	19	624	260	400	R25	R25	8731E1, 9624450980	GS0424
306(A/B/C/E/D)		03/93→04/01	8	19	650	265	190	R25	R25	792509, 9629219580	GS0266
307		08/00→	8	19	457,5	176	430	R25	R25	792515	GS0159
307 SW		03/02→	8	19	594	180	630	R22	R22	8731F8, 9638605280	GS0417
308 (4A, 4C)		09/07→	8	19	460	180	F3 440	R25	R25	8731Q6	GS0800
308 SW	with opening window	09/07→	10	22	537	198	750	R25	R25	8731Q5, 7000510263E0	GS0721
308 SW	rear window	09/07→	8	19	584	250	150	R25	R25	9683422380	GS0722
308 SW	without opening window	09/07→	8	19	527	188	620	R25	R25	8731Q7	GS0723
309 II		07/89→07/93	8	19	567	230	380/440	R22	R22	873178, 9603762280	GS0201
309 II 19 GTI		07/89→07/93	8	19	567	230	450	R21	R21	873179, 9603762380	GS0324
405 I Break (15E), 405 II Break (4E)		10/88→10/96	10	22	418	148	700	R22	R22	873183, 9612504980, 9601430480	GS0418
406 (8B) (8E/F) (8C)		10/95→05/04	10	22	195	55	1100	R22	R22	792507	GS0518
406 (8B), 406 Break (8E/F)		10/95→05/04	8	19	685	265	200	R25	R25	792508, 792510, 9628157780, 9630662480	GS0471
406 (8C)		03/97→	8	19	286	100	310	R25	R25	8731C9, 0347040	GS0472
406 (R24)		10/95→12/98	8	19	490	190	250	R22	R22	8731A7, 9612504980, 9601430480	GS0178
406 (R24)		04/99→05/04	8	19	444	172	250	R22	R22	8731E9, 9636450380	GS0181
406 Break (8E/F)		10/96→	8	19	559	200	550	R21	R21	8731C5, 9626771680	GS0317
407 (6D)		05/04→10	8	19	320	105	470	R22	R22	8731K4, 9656592980, 9647261480	GS0793
407 (6E)		05/04→10	8	19	375	145	615	R22	R22	8731J6, 9647487680	GS0794
407 (6E)	tailgate window	05/04→10	8	19	310	110	400	R22	R22	8731K5, 9647487880, 9656593180	GS0795
504 Break		06/74→06/83	8	19	600	255	450	R2	R9	873143, 7920062656	GS0066
505		07/83→09/92	8	19	475	198	180/240	R2	R25	862214, 9252344980	GS0617
505 Break		07/83→09/92	8	19	640	190	470	R21	R21	873151	GS0309
605		01/94→12/98	8	19	195	50	760/860	R22	R22	792505, 9602673980	GS0575
605		01/94→12/98	8	19	408	150	310	R21	R21	8731A1, 9622165080	GS0314
607		02/00→	8	19	499	171	350/400	R21	R21	8731F9, 8731G9	GS0354

MAGNETI MARELLI

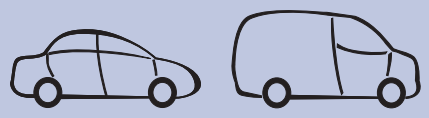

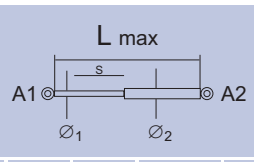

O.E.

MAGNETI MARELLI

PEUGEOT

		Ø1 [mm]	Ø2 [mm]	L max	S [mm]	F [N]	A1	A2	O.E.	MAGNETI MARELLI
607 (9D, 9U)	02/00→2010	8	19	554	185	F3 200	R23	R23	792516	GS0853
806	up to Vet. 07632 10/97→08/02	8	19	632	215	600	R22	R22	8731E5	GS0440
806	up to Vet. 07632 10/97→08/02	8	19	632	215	600	R22	R22	8731E5	GS0440
806	up to Vet. 06944 06/94→11/95	8	19	627	230	570	R2	R10	8731A3	GS0618
806	from Vet. 06945 do 07631 11/95→10/97	8	19	610	200	560	R2	R10	8731C1	GS0619
806	up to Vat. 07632 10/97→08/02	8	19	632	215	600	R21	R21	873100000	GS0359
807	06/02→	8	19	631	230	510	R21	R21	8731G6	GS0340
1007	04/05→	8	19	565	215	315	R22	R22	9649587680, 8731J3	GS0796
4007	02/07→	8	19	495	197	420	R22	R28	5802A007, 5802A008, 8731Q1	GS0841
Bipper (AA) , Tepee	02/08→	8	19	600	225	670	R22	R22	8731VO	GS0921
Expert	01/07→	10	22	700	172	1050	R22	R22	8731Q9	GS1044
Partner	07/96→	8	19	700	300	670	R23	R23	8731	GS0112
Partner Tapee	04/08→	10	22	620	225	625	R22	R25	8731S0	GS0684
Partner Tepee II	with equipment for orga no.11829 04/08→	8	19	543	220	200	R22	R22	8731V6	GS1018
Partner Tepee II	with equipment from orga no.118230 04/08→	8	19	563	235	140	R25	R50	8731R8	GS1019

PORSCHE

		Ø1 [mm]	Ø2 [mm]	L max	S [mm]	F [N]	A1	A2	O.E.	MAGNETI MARELLI
911, Carrera, Turbo, Targa	08/68 → 09/01	8	19	255	86	600	R2	R35	91151233102	GS0586
911, Carrera, Turbo, Targa	08/68 → 09/01	8	19	255	86	370	R2	R35	91151233101	GS0587
911 (997) Carrera	07/04→2011	8	19	240	70	380	R25	R25	99751155101	GS0868
911 (997) Carrera	07/04→2011	8	19	314,5	116	330	R22	R22	99751255100	GS0869
911 (993,964)	07/89→09/97	8	19	305	105	370	R25	R35	99351133100	GS0974
911 (996), Boxster (986)	09/97→08/05	8	19	225	60	560	R25	R25	99651155101	GS1000
Boxster (986)	09/96→2004	6	15	195,5	60	350	R25	R25	99651155101	GS0999
Boxster (987)	11/04→2011	8	19	195,5	36	500	R25	R25	98751255101	GS1006
Boxster (987)	11/04→	8	19	240	70	380	R25	R25	99751155101	GS0868
Boxster (987)	07/04→2011	8	19	240	70	380	R25	R25	99751155101	GS0868
Cayenne (955)	tailgate's window 09/02→	8	19	227	57	790	R22	R51	95551252800, 7L5845587B	GS0975
Cayenne (955)	09/02→	8	19	585	246	260	R22	R28	95551135900, 7L5823359	GS0976
Cayman	07/06→	8	19	240	70	380	R25	R25	99751155101	GS0868
Cayman	11/05→	8	19	632,5	216	550	R25	R50	98751255103, 98751255104, 98751255106, 98751255107	GS1016

RENAULT

		Ø1 [mm]	Ø2 [mm]	L max	S [mm]	F [N]	A1	A2	O.E.	MAGNETI MARELLI
Avantime	09/01→	8	19	357	128	555	R21	R21	6025401711	GS0347
Clio Grandtour (KR0/1)	02/08→	8	18,5	469,5	185	580	R28	R28	8200583852	GS0693
Clio I	01/91→08/98	8	19	471	191	360	R25	R25	7700800311, 7700272026	GS0092
Clio I Baccara, Elle, Wiliams	01/91→08/98	8	19	476,5	184	420	R22	R22	7700810554	GS0253
Clio II	08/98→	8	19	412	155	340	R22	R22	7700842256	GS0240

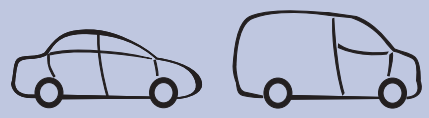

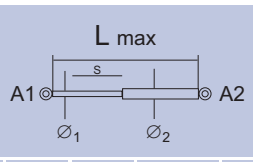

Ø1 [mm]	Ø2 [mm]	L max	S [mm]	F [N]	A1	A2	O.E.	

RENAULT

Clio III (BR0/1, CR0/1)		05/05→	8	19	451	185	385	R25	R25	32062565, 8200299	GS0791
Espace I (J11)		12/84→03/91	6	15	225	80	100	R26	R26	6025001988, 6025003919	GS0622
Espace I (J11)		01/88→03/91	8	19	601	225	450	R21	R21	6025006621, 6025005935	GS0318
Espace II (J63)		04/91→11/96	6	15	185	55	100	R26	R26	6025100991	GS0545
Espace II (J63)		04/91→11/93	8	19	525	206	560	R21	R21	6025101952	GS0311
Espace II (J63)		11/93→11/96	8	19	546	220	490/530	R21	R21	6025106762	GS0312
Espace III (JE)	without window that can be opened	11/96→10/02	10	22	560	210	730	R22	R22	6025300735	GS0227
Espace III (JE)	with window that can be opened	11/96→10/02	10	22	560	210	800	R22	R22	6025305941	GS0228
Espace III (JE)	tailgate's window	11/96→10/02	6	15	447	170	130	R25	R25	6025306563	GS0229
Espace IV (JK0)		11/02→07/04	8	19	395	150	230	R25	R25	8200091749	GS0473
Espace IV (JK0)		07/04→	8	19	395	150	470	R25	R25	8200362400	GS0474
Espace IV (JK0)	without openable window	11/02→	10	22	730	200	700	R22	R22	8200021974	GS0519
Espace IV (JK0)	with openable window	11/02→	10	22	730	200	760	R22	R22	8200021975	GS0520
Espace IV (JK0)	tailgate window	11/02→	6	15	547	190	170	R25	R25	8200025105	GS0550
Express/Rapid (F4)		07/85→03/98	8	19	673,5	275	440	R21	R21	7700807057	GS0313
Grand Espace III (JE)	with window that can be opened	11/96→10/02	10	22	560	210	800	R22	R22	6025305941	GS0228
Grand Espace III (JE)		11/96→10/02	6	15	447	170	R280	R25	R25	6025306563	GS0229
Kangoo		03/98→	10	22	690	280	630	R25	R25	7700303186, 7700303139	GS0127
Kangoo Express		03/98→	10	22	690	280	630	R25	R25	7700303186	GS0127
Kangoo II		02/08→	8	19	833	300	560	R37	R37	8200497806	GS1035
Koleos (HY)		09/08→	8	19	585	250	430	R22	R22	904513981R, 904505599R	GS1036
Laguna I (B56)	with side shield	03/94→03/01	8	19	596	210	450	R22	R25	7700846772	GS0543
Laguna I (B56)	with side shield	03/94→03/01	8	19	596	210	510	R22	R25	7700846773	GS0544
Laguna I (B56)		03/94→03/01	8	19	595	210	470	R22	R25	7700842152, 7700823271, 7700829764, 7700842153	GS0278
Laguna I Grandtour (K56)	tailgate window	93/94→03/01	6	15	502	200	125	R25	R25	7700838006	GS0546
Laguna I Grandtour (K56)	without window that can be opened	03/94→04/98	8	19	473,5	170	590	R22	R25	7700838005	GS0378
Laguna II (B74)		03/01→	8	19	513	207	535	R25	R25	8200000902	GS0188
Laguna II (B74)		03/01→	8	19	513	207	585	R25	R25	8200003020	GS0189
Laguna II Grandtour (K74)	without openable window	03/01→	8	19	535	220	425	R25	R25	8200025317	GS0475
Laguna II Grandtour (K74)	tailgate window	03/01→	6	15	530	213	110	R25	R25	7703024021, 8200000896	GS0547
Laguna II Grandtour (K74)	with window	03/01→	8	19	534,5	220	480	R25	R25	8200000903	GS0433
Laguna III (BT0/1)		10/07→	8	18,5	495	205	610	R25	R25	844300001R	GS0696
Laguna III Grandtour (KT0/1)		10/07→	8	18,5	569	240	670	R25	R25	844300004R	GS0697
Laguna III Grandtour (KT0/1)	rear window	10/07→	6	15	334	130	270	R25	R28	904600001R	GS0698
Megane Classic (LA0)		09/96→09/03	8	19	300	100	410	R25	R25	7700838612	GS0180
Megane Coach/Coupe (DA0)		09/96→11/02	8	19	180	55	480	R25	R1	7700838487, 7700838690	GS0527
Megane Grand Scenic II	with openable window	06/03→	8	19	520	175	640	R22	R22	8200119498, 8200212598	GS0476

MAGNETI MARELLI

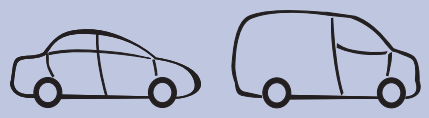

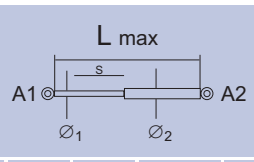

O.E.

MAGNETI MARELLI

RENAULT

		Ø1 [mm]	Ø2 [mm]	L max	S [mm]	F [N]	A1	A2	O.E.	
Megane Grand Scenic II	tailgate window	01/04→	6	15	365	135	135	R25	R25	8200130187	GS0551
Megane Grandtour (KA0)		03/99→09/03	8	19	465	178	425	R22	R22	7700418621	GS0157
Megane I		10/96→02/99	8	19	165	40	650	R22	R22	7700848464, 7700848404	GS0751
Megane I (BA0)	5	01/96→11/02	8	19	440	160	450/500	R22	R22	7700828451, 7700843698	GS0130
Megane I Saloon (BA0)		03/99→11/02	8	19	440,5	160	520	R22	R22	7700421906	GS0154
Megane II (BM0)(CM0)		11/02→	8	19	417	155	500	R22	R22	8200051750	GS0211
Megane II Coupe		11/02→	8	19	417	155	500	R22	R22	8200051750	GS0211
Megane II (EM0/1)		04/08→	8	19	446	170	490	R22	R22	7701057303, E84827465A	GS0927
Megane II Grandtour		09/03→	8	19	547	215	500	R22	R22	8200119498, 8200212598	GS0367
Megane II Grandtour (KM0/1)	tailgate's window	08/03→2006	8	19	520	208	130	R22	R22	8200135264	GS0877
Megane II Grandtour (KM0/1)	with window that can be opened	08/03→2006	8	19	547	220	550	R22	R28	8200212598	GS0893
Megane II Sedan (LM0/1)		09/03→2009	8	19	345	122	350	R22	R22	8200119497	GS0854
Megane Scenic 95	with window that can be opened	01/97→08/99	8	19	595	212	515	R22	R22	7700828454	GS0129
Megane Scenic 95	without window that can be opened	12/96→08/99	8	19	595	250	515	R22	R22		GS0149
Megane Scenic 99	with window that can be opened	09/99→06/03	8	19	595	212	515	R22	R22	7700828454	GS0129
Megane Scenic 99	without window that can be opened	09/99→06/03	8	19	595	212	485	R22	R22	7700434465	GS0151
Megane Scenic 99	tailgate's window	09/99→06/03	8	19	460	169	100	R25	R25	7700430022	GS0152
Megane Scenic II (JM)	with openable window	06/03→	8	19	520	175	640	R22	R22	8200119500, 8200377789	GS0476
Megane Scenic II (JM)	with openable window	06/03→2009	8	19	520	180	F3-625	R23	R23	8200174571, 8200377199, 8489348	GS0891
Megane Grand Scenic II	with openable window	06/03→	8	19	520	180	F3-625	R22	R22	8200174571, 8200377199, 8489348	GS0891
Megane Scenic II (JM)	tailgate window	06/03→	6	15	365	135	135	R25	R25	8200130187	GS0551
Megane III (BZ0)		11/08→	8	18,5	431	160	600	R22	R22	904510001R	GS0694
Megane III (DZ0/1)		11/08→	8	18,5	664	275	265	R22	R22	904510002R	GS0695
Megane III Grandtour (KZ0/1)		11/08→	8	19	482,5	200	705	R22	R22	844300009R	GS0913
Megane Scenic TT	with window that can be opened	09/99→06/03	8	19	595	212	515	R22	R22	7700828454	GS0129
Megane Scenic TT	without window that can be opened	09/99→06/03	8	19	595	212	485	R22	R22	7700434465	GS015
Modus	two pieces tailgate	12/04→	10	22	533	220	750	R22	R41	8200219323, 8200461349	GS1037
Modus (F/JP0)	one piece tailgate	12/04→	8	19	533	200	515	R25	R25	8200219322, 8453460	GS0790
R 11		12/86→90	10	22	431	121	680/740	R25	R25	7702149568	GS0623
R 19 I (B/C53)		11/88→04/92	8	19	502	200	400	R21	R21	7700786247, 7700799026	GS0004
R 19 I (B/C53), R 19 II (B/C53)		11/88→12/95	8	19	505	200	520	R22	R22	7700786248, 7700799027	GS0255
R 19 I Chamade (L53)		04/89→04/92	8	19	310	89	590	R21	R21	7700811570	GS0308
R 19 II (B/C53)		04/92→12/95	8	19	500	204	500	R21	R21	7700818237	GS0093
R 19 II Chamade (L53)		04/92→12/95	8	19	310	89	650	R22	R22	7700824817	GS0552
R 21		05/89→04/94	8	19	677	274	340/400	R23	R23	7700795698, 7700795731	GS0624
R 21 Nevada		03/86→04/94	8	19	486	170	585	R2	R35	7700785587	GS0625
R 25		09/86→02/93	8	19	270	90	540	R23	R35	7701033344	GS0548
R 25		04/84→08/86	8	19	268	90	540	R2	R35	7700753540	GS0626

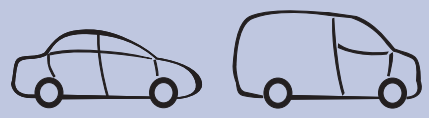

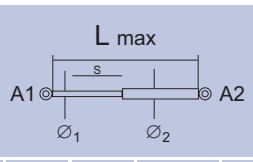

Ø1 [mm]	Ø2 [mm]	L max	S [mm]	F [N]	A1	A2	O.E.	
RENAULT								
R Super 5	01/85→06/91	8	19	700	251	200	R22	R22	7702144629	GS0021
R Super 5 Baccara	01/85→06/91	8	19	691,5	285	270	R21	R21	7700787749	GS0333
Safrane I	04/92→07/96	8	19	539,5	220	250	R21	R21	7700812193	GS0325
Safrane I	04/92→07/96	8	19	540	220	220/250	R22	R22	7700812193	GS0325
Safrane I (without Baccara version)	04/92→07/96	8	19	572	215	580	R22	R23	7700811019, 7700831959	GS0553
Safrane I Baccara	04/92→07/96	8	19	572	215	670	R22	R23	7700829825, 7700832534	GS0554
Safrane II	08/96→12/00	8	19	573	230	530	R25	R25	7700413083	GS0477
Safrane II	08/96→12/00	8	19	573	230	620	R25	R25	7700414002	GS0478
Safrane II	08/96→12/00	8	19	539,5	220	250	R21	R21	7700812193	GS0325
Safrane II	08/96→12/00	8	19	540	220	220/250	R22	R22	7700812193	GS0325
Trafic (FL, JL)	03/01→	8	19	905	307	730	R23	R23	8200162697	GS0549
Twingo (CN0)	03/07→	8	19	383	137	455	R25	R25	8200385560	GS0925
Twingo I, Twingo II	03/93→	10	22	450	162	740	R22	R22	7700815R285	GS0329
ROVER										
25 (RF)	10/99→	8	19	599	220	360	R22	R22	BHE45001, BHE450030	GS0426
45 (RT)	02/00→	8	19	515	200	445	R25	R25	BHE140010	GS0443
45 (RT)	02/00→	8	19	515	200	490	R25	R25	BHE140020	GS0479
75 (RJ)	02/99→	8	19	314	105	370	R25	R22	BMH500010	GS0404
75 Tourer (RJ)	tailgate window	08/01→	8	19	398	120	180	R25	R25	BHE500070	GS0480
75 Tourer (RJ)	with window that can be opened	08/01→	8	19	565	210	560	R25	R22	BHE500050	GS0405
75 (RJ), 75 Tourer (RJ)	02/99→	8	19	338	119	420	R22	R22	BKK500010	GS1025
100 (XP)	11/89→12/98	8	19	552	205	370	R22	R22	GSA922, BHE39005	GS0207
100 (XP)	11/89→12/98	8	19	552	200	410	R22	R22	GSA923, BHE39006	GS0208
200 (RF)	03/85→10/95	8	19	599	220	360	R22	R22	BHE45001, BHE450030	GS0426
200 (XH, XW) without GTI version	03/85→10/95	8	19	679	270	360	R22	R22	GSA925, GTS120, BHE38025	GS019
200 Coupe (XW)	01/92→11/99	8	19	274	95	320	R25	R25	BMH38003, BMH38004	GS10381
200 (XH, XW) GTI	03/85→10/95	8	19	680	270	360	R23	R23	GSA930, GTS122, BHE38017	GS0627
400 (RT)	05/95→03/00	8	19	515	200	445	R25	R25	BHE140010	GS0443
400 (RT)	05/95→03/00	8	19	515	200	490	R25	R25	BHE140020	GS0479
800 (XS)	up to Vet. 230966	10/86→10/92	8	19	569	215	530	R21	R21	BHM410040	GS0334
800 (XS)	01/92→02/99	8	19	513	215	350	R21	R21	BKK41003	GS0355
800 (XS)	from Vat. 230967	10/92→02/99	8	19	606,5	230	540	R22	R25	BHE41003, BHE41004	GS0379
Maestro	84→93	8	19	507	208	436	R21	R21	BEP6628	GS0358
Metro (XF)	84→89	8	19	542	210	300	R22	R22	AFP1282	GS0041
Metro (XF)	89→93	8	19	552	205	370	R22	R22	GSA922, BHE39005	GS0207
Metro (XF)	89→93	8	19	552	200	410	R22	R22	GSA923, BHE39006	GS0208
Mini Metro	→80	8	19	542	210	300	R22	R22	AFP1282	GS0041
Streetwise	08/03→04/05	8	19	600	228	360	R22	R22	BHE450030	GS0880

MAGNETI MARELLI

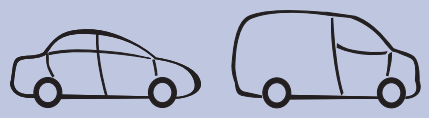

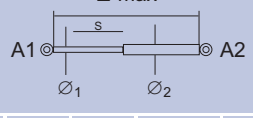

			Ø1 [mm]	Ø2 [mm]	L max	S [mm]	F [N]	A1	A2	O.E.	MAGNETI MARELLI
ROVER											
Streetwise		89→93	8	19	601	226	360	R22	R22	BHE450030	GS0388
SAAB											
99		09/74→12/84	8	19	500	201	600	R2	R35	9231796, 9233727	GS0604
99 I Combi Coupe		03/76→06/80	8	19	500	201	600	R2	R9	9231796, 9233727	GS0604
900 I Combi Coupe		09/78→06/84	8	19	500	201	600	R2	R35	9231796, 9233727	GS0604
900 I Combi Coupe		11/78→09/93	8	19	500	195	650	R2	R35	9293580	GS0628
900 II (YS3D)		10/93→03/98	8	19	525	210	240	R22	R22	4323994	GS0629
900 II (YS3D)		10/93→03/98	8	19	524	210	240	R21	R21	4323994	GS0346
900 II (YS3D)		10/93→03/98	8	19	570	230	420	R22	R22	4326468	GS0394
900 II (YS3D)		10/93→03/98	8	19	570	230	520	R22	R22	4324307	GS0395
9000		09/84→05/98	6	15	547	214	225	R2	R9	9270240	GS0555
9000 CC	from Vet. -H1007932, -H8000100	09/84→12/98	8	19	700	295	400	R2	R35	6956288	GS0495
9000 CC	up to Vet. -H1007931, -H8000099	09/84→12/98	8	19	670	278	320	R2	R35	9253964	GS0498
9000 CC	up to Vet. -H1007931, -H8000099	09/84→12/98	8	19	670	294	345	R2	R35	6956262	GS0499
9000 CC	from Vet. -H1007932, -H8000100	09/84→12/98	8	19	700	295	345	R2	R35	6956270	GS0500
9000 CD		04/85→12/98	8	19	226	63	100	R2	R35	6976369	GS0497
9000 CS	from Vet. -H1007932, -H8000100	09/84→12/98	8	19	490	195	610	R22	R22	4006078	GS0496
9000 CS	from Vet. -H1007932, -H8000100	09/84→12/98	10	22	492	195	660	R22	R22	4006060	GS0556
9-3		03/05→	14	28	399	86	1340	R47	R47	12797509, 1277855	GS0923
9-3 (YS3D)	with one gas spring	02/98→09/02	8	19	524	210	480	R21	R21	5183017	GS0345
9-3 (YS3D)		02/98→09/02	8	19	567	230	500	R22	R22	4854733, 4854717	GS0370
9-3 (YS3D)		02/98→09/02	8	19	570	240	470	R22	R22	4858627	GS0396
9-3 (YS3D) Viggen		02/98→09/02	8	19	567	230	560	R22	R22	5022082	GS0391
9-3 (YS3F)		09/02→	8	19	567	230	500	R22	R22	4854733, 4854717	GS0370
9-5 (YS3E)		09/97→	8	19	280	90	550	R22	R23	4855094, 5117015, 5360839	GS0557
9-3 (YS3F), 9-3 Convertible (YS3F)		09/02→	8	19	740	310	290	R28	R25	127850021, 12785021	GS0855
9-3 Convertible (YS3F)		08/03→	8	19	318	120	380	R25	R25	1012831543, 12831543	GS0832
9-3 Convertible		09/02→	8	19	739	300	290	R28	R25	12785021	GS0941
9-5 (YS3E)		10/98→	10	28	396	108	1550	R39	R39	4699260	GS0630
9-5 (YS3E)			8	19	763	350	200	R22	R22		GS0631

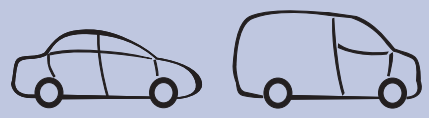

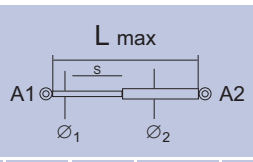

O.E.	MAGNETI MARELLI

SEAT

			Ø1 [mm]	Ø2 [mm]	L max	S [mm]	F [N]	A1	A2	O.E.	MAGNETI MARELLI
127, Fura (025A)		77→12/86	8	19	600	255	200	R2	R9	XO39401990	GS0010
127, Fura (025A)		71→77	8	19	549	229,5	350	R2	R9	XO42977420	GS0015
128		69→85	8	19	600	255	360	R2	R9	XO39440480	GS0011
Alhambra (7MS)		08/00→	8	19	452	177	350	R25	R25	7M3827550A	GS0481
Alhambra (7MS)		09/95→	10	22	593	200	830	R22	R22	7M0827550D, 7M0827550F, 7M0827550G	GS0126
Altea (5P1)		03/04→	8	19	500	204	480	R25	R25	5P0827550A	GS0099
Altea XL (5P5, 5P8)	klapa bagażnika	10/06→	8	19	419	165	510	R22	R22	5P8827550	GS0908
Arosa (6H)		01/97→	8	19	500	200	320	R25	R22	6X0827550, 6X0827550A, 8L0823359	GS0283
Cordoba I (6K2/C2)		02/93→06/99	8	19	284	100	330	R21	R21	6K5827550, W06K5827550	GS0062
Cordoba I Vario (6K5)		09/96→06/99	8	19	500	204	480	R25	R25	6K0827550, 6K0827550A	GS0099
Cordoba II (6K2)		06/99→12/02	8	19	287	99	365	R22	R22	6K5827550C	GS0258
Cordoba II Vario (6K5)		06/99→	8	19	500	204	480	R25	R25	6K0827550, 6K0827550A	GS0099
Cordoba III (6L2)		09/02→	8	19	285	105	600	R25	R22	6L5827550B	GS0843
Ibiza I (021A)		06/84→12/93	8	19	696	278	220	R2	R9	XO39503120, XO39507910, SE021526200A	GS0022
Ibiza II (6K1)		12/93→08/99	8	19	525	206	320	R22	R22	6K6827550, W06K6827550	GS0139
Ibiza III (6K1)		08/99→02/02	8	19	527	210	350	R22	R22	6K6827550A	GS0210
Ibiza IV (6L1)		02/02→	8	19	500	200	470	R25	R22	6L6827550B	GS0224
Ibiza V (6J5)		03/08→	8	19	559	230	290	R25	R28	6J4827550, 6J4827550B	GS0917
Ibiza V Sportcoupe (6J1)		07/08→	8	19	452	144	455	R25	R28	6J3827550	GS0916
Leon (1M1)		11/99→	8	19	500	200	450	R25	R22	1M6827550A	GS0179
Leon (1M1)		11/99→	8	19	574	235	330	R21	R21	1M0823359A	GS0338
Leon (1P1)		09/05→	8	19	500	195	340	R25	R22	1P0827550, 1P0827550A	GS0833
Malaga (023A)		11/84→12/93	8	19	254	85	340	R2	R35		GS0632
Marbella (028)		08/86→10/98	8	19	549	229,5	240	R2	R10	XO39553290, SE028526200B	GS0016
Panda		05/80→09/86	8	19	549	229,5	240	R2	R10	XO44836580, SE14523200A	GS0016
R281		06/75→12/86	8	19	600	255	310	R2	R9	XO39303770	GS0042
Ritmo/Roda (022A)		07/83→11/88	8	19	600	250	540	R3	R35	XO39481770	GS0601
Ritmo/Roda (02R2)		78→07/83	8	19	600	255	200	R2	R9	XO39401990	GS0010
Ritmo/Roda (02R2)		07/83→11/88	8	19	600	255	360	R2	R9	XO39462450, SE02252620A	GS0011
Toledo I (1L)		01/91→03/99	8	19	515	195	500	R22	R22	1L0827550, 1L0827550A, W1L0827550	GS0123
Toledo II (1M2)		04/99→	8	19	278	90	530	R22	R22	1M5827550B	GS0192
Toledo II (1M2)		04/99→	8	19	574	235	330	R21	R21	1M0823359A	GS0338
Toledo III (5P2)		10/04→	8	22	870	370	370	R25	R22	5P5827550	GS0576

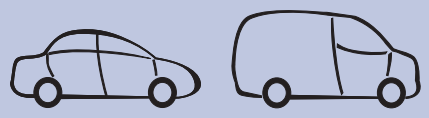

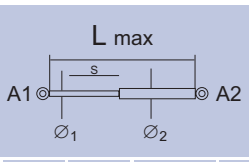

O.E.

MAGNETI MARELLI

SKODA

			Ø1 [mm]	Ø2 [mm]	L max	S [mm]	F [N]	A1	A2	O.E.	MAGNETI MARELLI
-	Trading, additional storey Furgon	→	8	19	509	207	220	R22	R22		GS0046
Fabia (6Y2)	5	11/99→	8	19	441,5	169	600	R22	R22	6Y0827550A	GS0173
Fabia (6Y3)	4	04/01→	8	19	279	95	490	R22	R22	6Y5827550A	GS0134
Fabia (6Y5)		11/00→	8	19	441,5	169	600	R22	R22	6Y0827550A	GS0173
Fabia II		12/06→	8	19	495	205	440	R22	R22	5J6827550B	GS0746
Fabia II		12/06→	8	19	495	205	440	R22	R22	5J6827550B	GS0746
Favorit	all include Forman	→10/93	8	19	509	207	420	R22	R22	441964920386	GS0005
Favorit		→10/93	8	19	527	219	450	R22	R22	441964420486	GS0060
Favorit pick-up	with additional storey	89→94	8	19	528	224	160	R21	R21		GS0026
Favorit pick-up	with additional storey	91→95	8	19	516	207	220	R2	R9	441564420066	GS0036
Felicia		94→	8	19	527	219	450	R22	R22	6U0827551A, 6U0827551B, 441964420476	GS0060
Felicia		94→	8	19	527	219	450	R22	R22	6U0827551A, 6U0827551B, 441964420476	GS0060
Felicia		→94	8	19	527	219	450	R22	R22	6U0827551A, 6U0827551B, 441964420476	GS0060
Felicia pick-up	with additional storey	→94	8	19	528	224	220	R21	R21		GS0098
Felicia van plus	with additional storey	→94	8	19	700	300	325	R28	R25	441664420086	GS0056
Forman		→10/93	8	19	527	219	450	R22	R22	441964420486	GS0060
Forman Plus	with additional storey	→09/94	8	19	700	300	325	R22	R28	441664420076	GS0037
Octavia (1U2)		09/96→09/00	8	19	492	196	470	R22	R22	1U6827550, 1U6827550A, 1U6827550B, 1U6827550C	GS0216
Octavia (1U2)		09/00→	8	19	496,5	198	500	R22	R22	1U6827550E	GS0217
Octavia (1U2)		09/00→	8	19	495	182	515	R22	R22	1U6827550F	GS0218
Octavia (1U5)		07/98	8	19	405	160	550	R21	R21	1U9827550A, 1U9827550B	GS0044
Octavia RS (1U2)	ver. Rally Sport	09/00→	8	19	494	182	550	R22	R22	1U6827550G	GS0219
Octavia RS (1U2)	ver. Rally Sport	09/00→	8	19	494	182	565	R22	R22	1U6827550H	GS0220
Octavia II (1Z3)		02/04→	8	19	585,5	245	405	R22	R22	1Z5827550, 1Z5827550B, 1Z5827550C, 1Z5827550D, 1Z5827550E, 1Z5827550F	GS0730
Octavia II (1Z5)		02/04→	8	19	490,5	200	480	R22	R22	1Z9827550	GS0732
Roomster (5J) Praktik (5J)		09/06→	8	19	420	162	600	R22	R22	5J7827550	GS0747
Superb		02/02→	8	19	279	95	520	R22	R22	3B5827550E	GS0432
Superb (3T4)		03/08→	8	18,5	538	205	650	R22	R22	3T5827550	GS0687
Superb (3U4)		02/02→03/08	8	19	721,5	315	350	R22	R22	3U0823359	GS0834
Superb 3T4, Superb Estate (3T5)		03/08→	8	18,5	728	310	315	R28	R22	3T0823359	GS0686

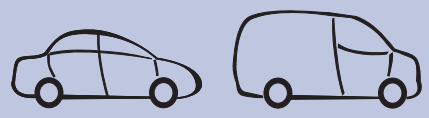

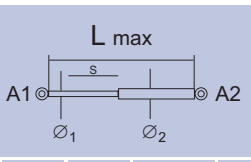

			Ø1 [mm]	Ø2 [mm]	L max	S [mm]	F [N]	A1	A2	O.E.	
SKODA											
Superb (3T4)		03/08→	8	19	404,5	160	310	R25	R25	3T5827552	GS0920
SMART											
Forfour		01/04→06/06	8	19	532,5	190	360	R22	R22	A4547400145	GS0929
Fortwo Coupe		01/07→	8	19	445	176	90	R25	R50	A4519880004	GS1011
Smart (MC01)		07/98→	6	15	305	109	130	R23	R23	113000013, 0000618V007	GS0633
Roadster		04/03→2006	8	19	435	175	170	R25	R25	Q0009235V004000000, Q0009235V005000000	GS0904
Roadster		04/03→	8	19	299	110	240	R25	R25	0009223V005, 0009223V, Q0009223V003000000	GS0878
SSANGYONG											
Kyron		05/05→	8	19	527	188	620	R25	R25	7145009000, 7146009000	GS0723
Rexton	with window that can be opened	04/02→	8	19	549,5	200	620	R22	R22	7140608100, 7140608110, 7141608100, 7141608110	GS0332
Rexton		04/02→	8	19	310	95	430	R21	R21	7115008100	GS0351
Rexton		04/02→	8	19	310	95	430	R22	R22	7115008100	GS0351
Rexton		04/02→	8	19	353	110	150	R22	R22	7143608100	GS0352
SUBARU											
Impreza (GD, GG) Estate		12/00→2007	8	19	568	233	330	R22	R22	63269FE000	GS0884
Impreza (GF) Estate		08/92→12/00	8	19	613	260	300	R22	R22	60315FA010, 60335FA100, 60335FA120, 60335FA000	GS0885
Justy IV		01/07→	8	19	414	160	410	R23	R23	68950B1031, 68960B1031	GS0966
SUZUKI											
Alto I (SS80)		06/82→12/85	8	19	670	270	360	R25	R25	81860M70F10000, 81850M76G20A, 81860M76G20A	GS0581
Alto II (EC)		01/86→11/93	8	19	670	270	360	R25	R25	81860M70F10000, 81850M76G20A, 81860M76G20A	GS0581
Alto III (EF)		09/94→06/02	8	19	670	270	360	R25	R25	81860M70F10000, 81850M76G20A, 81860M76G20A	GS0581
Ignis II		09/03→2008	8	19	550	235	280	R23	R23	8185086G00000, 8186086G00000, 8185086G00X10	GS0845
Jimny		81→87	8	19	465	169	113	R2	R35	81860A80100	GS0493
SA310 (Swift)		82→89	8	19	465	169	113	R2	R35	81860A80100	GS0493
SA413 (Swift)		82→89	8	19	465	169	113	R2	R35	81860A80100	GS0493
Samurai (SJ)		11/88→	8	19	465	169	113	R2	R35	81860A80100	GS0493
Sierra (Samurai)		82→89	8	19	465	169	113	R2	R35	81860A80100	GS0493
Samurai SJ410		09/81→12/88	8	19	465	169	113	R2	R35	81860A80100	GS0493

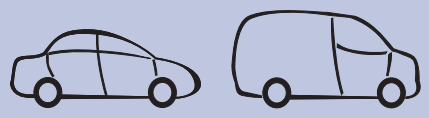

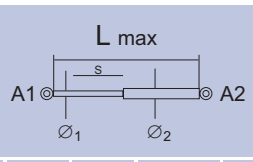

O.E.

MAGNETI MARELLI

SUZUKI

		Ø1 [mm]	Ø2 [mm]	L max	S [mm]	F [N]	A1	A2	O.E.	MAGNETI MARELLI
Samurai SJ413	09/84→08/90	8	19	465	169	113	R2	R35	81860A80100	GS0493
Swift	03/89→	8	19	613,8		190	R34	R24	8180062831, 818506R320	GS0090
Swift	03/89→	8	19	613,8		190	R34	R24	8180062841, 8186062B20	GS0091
Swift III (SG)	02/05→10	8	19	439,5	155	410	R22	R22	8185062J00, 8180063811, 8180162811000	GS1039
SX4	06/06→	8	19	445	160	420	R22	R22	8185079J00, 8186079J00, 8186079J01	GS0844
Vitara (ET, TA)	07/88→03/98	8	19	558	200	135	R2	R35	9390085C00	GS0494
Vitara (ET, TA)	07/88→03/98	8	19	587	235	100	R60	R60	8185185C00	GS0972
Wagon + (MM)	R (kei car) 05/00→	8	19	645	202,6	470	R32	R33	8185083E10, 8185084E00	GS0087
Wagon + (MM)	L (kei car) 05/00→	8	19	645	202,6	470	R32	R33	8186083E10, 8186084E00	GS0088
Wagon R+ (MM)	(kei car) 02→07	8	19	643	204	475	R25	R25	4705436, 4705437	GS1034

TOYOTA

		Ø1 [mm]	Ø2 [mm]	L max	S [mm]	F [N]	A1	A2	O.E.	MAGNETI MARELLI
Auris (ZE15, RE15)	10/06→	8	19	443,5	165	455	R25	R25	6896002081, 6895002091	GS1040
Avensis	09/97→04/03	8	19	450	170	600	R21	R21		GS0120
Avensis (T22)	09/97→10/00	8	19	498	225	540	R25	R25	6896009050, 6896009080	GS0584
Avensis (T22)	09/97→10/00	8	19	498	225	540	R25	R25	6895009050, 6895009080	GS0584
Avensis (T25)	04/03→2008	8	19	445	183	550	R28	R25	6895009140, 6895009150, 6896009090, 6896009100, 6895005060, 6896005060, 6894005072, 6896005072	GS0765
Aygo	07/05→	8	19	555	228	305	R22	R22	689500H010, 689500H020	GS0753
Carina E (T19)	04/92→09/97	8	19	611	228	420	R23	R23	6895005010	GS1001
Corolla	5 04/97→01/02	8	19	495	192	500	R22	R22		GS0079
Corolla (E12U)	3 5 01/02→	8	19	468	163	440	R25	R22	6895002040, 6896002030, 689500W170, 689600W170	GS0486
Compact (E11)	04/97→01/02	8	19	495	180,5	510	R25	R25	6896002010, 6895002020, 6896009060, 6895009090	GS0957
Corolla Compact (E11)	04/97→01/02	8	19	495	180,5	510	R25	R25	6896002010, 6895002020, 6896009060, 6895009090	GS0958
Corolla Hatchback (E11)	04/97→01/02	8	19	495	180,5	510	R25	R25	6896002010, 6895002020, 6896009060, 6895009090	GS0957
Corolla Hatchback (E11)	04/97→01/02	8	19	495	180,5	510	R25	R25	6896002010, 6895002020, 6896009060, 6895009090	GS0958
Corolla Liftback (E11)	04/97→01/02	8	19	496	180	570	R25	R25	6895009100, 6896002020, 6895002030	GS0958
Corolla Verso (ZER, ZZE)	03/04→	8	19	531	173	545	R22	R22	689500F010, 689600F010, 689500F011, 689600F011, 689500F012, 689600F012	GS0731
Corolla Verso	01/02→	8	19	511	200	550	R22	R22	689500W101, 689600W091	GS0167
Corolla Verso (E12J)	01/02→	8	19	510	172	545	R25	R25	689500W101, 689600W091	GS0634
Corolla Wagon (E12J)	01/02→	8	19	434	153	585	R25	R25	689500W140, 689600W140	GS0487

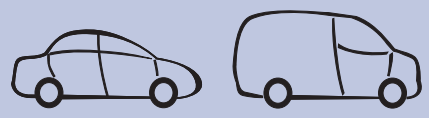

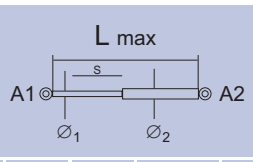

			Ø1 [mm]	Ø2 [mm]	L max	S [mm]	F [N]	A1	A2	O.E.	MAGNETI MARELLI
TOYOTA											
Prius		08/03→2009	8	19	493	195	445	R25	R25	689500W251, 689600W240	GS0959
Yaris		11/05→2011	8	19	430	170	370	R22	R22	689500D020, 689500D021, 689500D022, 689600D010, 689600D011, 689600D012	GS0842
Yaris (SP90)		04/99→2005	8	19	500	203	245	R25	R22	6895009110, 6896009120	GS0886
TWEKS (ТВЭКС)											
ВП-05	engine hood - digger		8	19	450	175	340	R21	R21	21086308015	GS0024
UAZ											
3160	(with ball stud)	→99	8	19	450	175	260	R21	R21	21216308015	GS0025
VAUXHALL											
Agila	R	09/00→	8	19	645	202,6	470	R32	R33	9209569, 4705436, 9210307, 4705684	GS0087
Agila	L	09/00→	8	19	645	202,6	470	R32	R33	9209570, 4705437, 9210308, 4705685	GS0088
Astra Caravan Mk II	from Vat. J2502493-JE100001→	08/87→08/91	8	19	700	257	320	R22	R22	90241996 (90241995 without wiper)	GS0401
Astra Caravan Mk II	to Vet.- J2502492 -JE100000	09/84→08/87	10	22	699	257	540	R40	R39	90196023, 132734	GS0899
Astra Caravan Mk III	with loudspeakers	09/91→01/98	8	19	508	195	600	R22	R22	90341378, 132719	GS0124
Astra Caravan Mk III	without tailgate loudspeakers	09/91→01/98	8	19	509	195	550	R22	R22	90341377, 132720	GS0155
Astra Caravan Mk IV		01/98→03/04	8	19	566	204	500	R22	R22	90559245, 132739	GS0137
Astra Mk II		09/84→08/91	8	19	549	232	355	R22	R22	90159607	GS0031
Astra Mk II		09/84→08/91	8	19	550	232	320	R22	R22	90191920	GS0242
Astra Mk II		09/84→08/91	8	19	550	232	410	R22	R22	90191627	GS0243
Astra Mk III	3 5	09/91→01/98	8	19	591	242	350	R22	R22	90341282	GS0076
Astra Mk III (F)		01/91→09/98	8	19	283	87	400	R25	R25	90486893, 176604	GS0994
Astra Mk IV	3 5 without ver. OPC, ECO, SPORT, SRI	01/98→03/04	8	19	537	205	430	R22	R22	90521517	GS0165
Astra Mk IV	3 for ver. OPC, ECO, SPORT, SRI	01/98→03/04	8	19	534,5	215	480	R22	R22	24411022	GS0166
Calibra		06/90→08/97	8	19	568	183	430	R21	R21	90346469	GS0363
Carlton Caravan Mk II		08/77→08/86	8	18	580	245	340	R21	R21	90043132, 132682	GS0392
Carlton Caravan Mk III		01/86→02/94	8	19	511	199	520	R22	R22	90246621 (90246620 without speakers)	GS0402
Carlton Mk III	from Vet. N1145949-	01/91→03/94	8	19	364	R285	180	R21	R21	90275102, 176603	GS0361
Carlton Mk III	up to Vet. -N1145948	09/86→01/91	8	19	364	R285	240	R21	R21	90275080, 176602, 90275073, 176601	GS0362
Cavalier Mk II		09/81→10/88	8	19	507,5	194	350	R22	R22	90195260	GS0384
Cavalier Mk II		09/81→10/88	8	19	510	208	440	R22	R22	90158125	GS0385
Cavalier Mk II		09/81→10/88	8	19	510	208	390	R22	R22		GS0389
Cavalier Mk III		04/88→09/95	8	19	473	188	530	R21	R21	90227936	GS0032
Cavalier Mk III		91→09/95	8	19	473	184	570	R22	R22	90227934	GS0257

MAGNETI MARELLI

			Ø1 [mm]	Ø2 [mm]	L max	S [mm]	F [N]	A1	A2	O.E.	
VAUXHALL											
Corsa Mk I		03/93→09/00	8	19	543,5	206	360	R21	R21	90481270	GS0053
Corsa Mk I		03/93→09/00	8	19	565	216	360	R22	R22	90388707	GS0143
Corsa Mk I		03/93→09/00	8	19	544	206	320	R22	R22	90481269	GS0241
Corsa Mk II		09/00→	8	19	475	196	350	R21	R21	9114311	GS0119
Corsa Mk III		07/06→	8	19	609,5	251,5	245	R22	R22	176413, 13182309	GS0872
Corsa Mk III		07/06→	8	19	603	255	240	R22	R22	176414, 13182537	GS0892
Frontera Mk II	spare tyre bracket	10/98→2003	8	19	500	230	135	R25	R25		GS0890
Insignia		07/08→	8	19	500	146	660	R22	R22	13332570, 13246577, 13321298	GS0915
Insignia sports tourer R	without automatic opening	07/08→	8	30	652	218	750	R22	R22	176676, 13247949	GS0987
Insignia sports tourer R	with automatic opening	07/08→	10	22	661	260	800	R22	R22	132020, 13332885, 13278257, 176541	GS0988
Insignia		07/08→	8	19	721,5	313	180	R22	R22	1180016, 13252173	GS0728
Meriva		05/03→	8	19	540	196	540	R21	R21	5132262, 93386999	GS0118
Nova		09/82→03/93	10	22	613,5	248	620	R39	R39	90127137, 132713, 90138517, 132696	GS0528
Nova		09/82→03/93	8	19	613,5	248	560	R39	R39	90127136, 132712, 90119276, 132694	GS0577
Nova		09/82→03/93	8	19	613,5	248	640	R39	R39	90127138, 132714, 90138518, 132695	GS0578
Omega		02/94→07/03	8	19	440,5	158	370	R22	R22	90379054, 176605	GS0209
Omega Caravan		02/94→07/03	8	19	510	202	620	R22	R22	90379081	GS0102
Senator	from Vet. N1145949-	01/91→09/93	8	19	364	R285	180	R21	R21	90275102, 176603	GS0361
Senator	up to Vet. -N1145948	09/87→01/91	8	19	364	R285	240	R21	R21	90275080, 176602	GS0362
Signum		05/03→	8	19	649,5	270	310	R21	R21	24454473, 1178224	GS0341
Signum		05/03→2008	10	22	482	185,5	700	R28	R22	176609, 9180256, 13191401, 13247868	GS0882
Sintra		09/96→04/99	10	22	725	210	819	R22	R22	10233373, 132730, 10400855, 132737, 10233372, 1 32 729, 10400854, 132736, 10324007, 132674	GS0516
Tigra		07/94→12/00	8	19	828	249	355	R21	R21	90481180	GS0364
Vectra Mk I	up to Vet. -W5999999- W7999999	10/95→98	8	19	469,5	171	560	R21	R21	90463749	GS0081
Vectra Mk I	from Vet. X1000001-	10/95→04/02	6	15	305,5	121	45	R25	R25	90463253, 176387	GS0177
Vectra Mk I	from Vet. X1000001-	35887	8	19	470	182	600	R22	R22	9152393	GS0256
Vectra Mk I, Vectra Caravan Mk I		10/95→04/02	10	22	249	67	850	R21	R21	90463721, 1180402	GS0084
Vectra Mk II		04/02→	8	19	264	80	520	R21	R21	9177081, 176607	GS0337
Vectra Mk II	manually closed	04/02→	8	19	649,5	270	310	R21	R21	13101335, 132691	GS0342
Vectra Mk II GTS	sport type	08/02→2008	8	19	475	195	640	R22	R22	0176608, 09180255, 176608, 13241974, 176608	GS0839
Vectra Mk II, Vectra Caravan Mk II		04/02→	8	19	649,5	270	310	R22	R21	24454473, 1178224	GS0341
Vivaro		08/01→	10	22	905	307	730	R23	R23	91168256, 4414419	GS0517

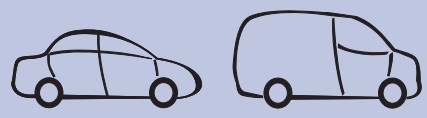

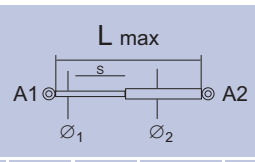

			Ø1 [mm]	Ø2 [mm]	L max	S [mm]	F [N]	A1	A2	O.E.	
VAUXHALL											
Zafira		04/99→	10	22	535	176	630	R22	R22	90579440, 132742	GS0136
Zafira Mk II		07/05→	10	22	505	205	610	R22	R22		
VOLVO											
340, 360		76→91	8	19	550	200	460	R23	R23	3344245	GS0635
440, 460		09/88→07/96	8	19	550	222	475	R23	R23	3470348, 3470350, 3436644	GS0562
480 E		04/86→07/96	8	19	534	217	200	R23	R23	3470350, 3436644	GS0510
740 (744)		09/85→08/92	6	15	365,5	150	290	R43	R44	1334648	GS0931
740 (745)		08/85→08/92	8	19	546	230	300	R22	R22	6846014	GS0310
760 (765)		01/82→07/92	8	19	546	230	300	R22	R22	6846014	GS0310
780		08/86→07/90	6	15	359	150	180	R43	R44	1376115, 180084	GS0960
850 (855) Kombi (LW)		08/92→12/96	10	29	270	70	1600	R39	R37	9485548, 9187315, 3509482	GS0529
940 (944), 960 (964)		08/90→10/98	8	19	525	205	310	R22	R22	3526575	GS0343
940 (944), 960 (964)		08/90→10/98	8	19	525	205	350	R22	R22	3529925	GS0344
940 (945) Kombi, 960 (965) Kombi		08/90→10/98	8	19	546	230	300	R22	R22	6846014	GS0310
C30		10/06→	8	19	730	316	140	R22	R22	31218478, 948357	GS0792
C 70		03/97→09/02	8	19	298	90	600	R25	R25	9485706	GS0488
C70 II		03/06→	8	19	730	316	140	R22	R22	31218478, 948357	GS0792
S 40		07/95→01/04	8	19	750	315	300	R25	R25	819865	GS0441
S 40		07/95→01/04	8	19	298	83	500	R22	R22	30852059, 30852060	GS0153
S 40 II		01/04→	8	19	320	100	360	R25	R25	30674203, 30674971	GS0489
S40 II		01/04→	8	19	730	316	140	R22	R22	31218478, 948357	GS0792
S 60		11/00→	8	19	270	75	420	R25	R25	8600233, 8650233	GS0482
S 60		11/00→	6	15	244	90	400	R25	R25	9154605	GS0636
S70 (P80)		01/97→11/00	8	19	496,5	195	340	R43	R22	9159604, 9159605, 9187795, 9187796, 9485546, 9485547	GS0936
S 80		05/98→	8	19	364	132	310	R25	R25	9483297, 9483299	GS0490
S 80		05/98→	8	19	363	132	370	R25	R25	30649439	GS0491
S 80		05/98→	6	15	244	90	400	R25	R25	9154605	GS0636
S80 II		03/06→	8	19	291	91	600	R22	R22	30779837, 3064983	GS0727
S80 II	maska silnika	03/06→	8	19	283	101,5	450	R22	R22	30649516	GS0726
S 90		01/97→05/98	8	19	525	205	310	R22	R22	3526575	GS0344
S 90		01/97→05/98	8	19	525	205	350	R22	R22	3529925	GS0344
V 40		07/95→	8	19	602,5	223	320	R22	R22	30803472	GS0182
V 50		04/04→	8	19	430	160	470	R25	R25	30674718, 30716189	GS0501
V50		04/04→	8	19	730	316	140	R22	R22	31218478, 948357	GS0792
V 70		01/97→03/00	10	29	270	70	1600	R39	R37	9485548, 9187315, 3509482	GS0529

MAGNETI MARELLI

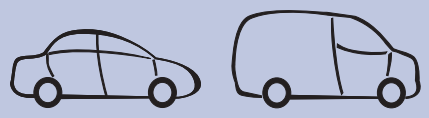

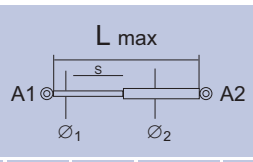

O.E.

MAGNETI MARELLI

		Ø1 [mm]	Ø2 [mm]	L max	S [mm]	F [N]	A1	A2	O.E.	
VOLVO										
V 70		03/00→	6	15	244	90	400	R25	R25	9154605	GS0636
V70 III		08/07→	8	19	283	101,5	450	R22	R22	30649516	GS0726
V70 III	without automatic opening	08/07→	10	22	308	88	1190	R23	R23	30674836, 3121764	GS1041
V70 III	with automatic opening	08/07→	8	19	299,5	88	370	R23	R23	31335795	GS1042
V 90		08/90→10/98	8	19	546	230	300	R22	R22	6846014, 1355263	GS0310
XC 70		09/00→	6	15	244	90	400	R25	R25	9154605	GS0636
XC 70		09/00→08/07	14	28	320	85	1200	R40	R39	30674494	GS0750
XC70 III	with automatic opening	08/07→	8	19	283	101,5	450	R22	R22	30649516	GS0726
XC70 III	without automatic opening	08/07→	10	22	308	88	1190	R23	R23	30674836, 3121764	GS1041
XC70 III	with automatic opening	08/07→	8	19	299,5	88	370	R23	R23	31335795	GS1042
XC 90		10/02→	8	19	509	200	320	R22	R22	30649736	GS0357
XC 90		10/02→	8	19	471	185	380	R25	R22	30634580	GS0419
XC 90		10/02→	8	19	471	185	380	R25	R22	30634580	GS0419
VOLKSWAGEN											
Bora (1J)		10/98→	8	19	500	200	350	R25	R22	1J0823359, 8L0823359	GS0260
Bora (1J2)		10/98→	8	19	279	95	490	R22	R22	3B5827550A	GS0134
Bora Variant (1J6)		05/99→	8	19	500	205	500	R25	R22	1J6827550	GS0131
Caddy I (14)		01/82→95	8	19	500	190	220	R2	R22	147827550	GS0563
Caddy III (2KA, 2KH)		03/04→	8	19	404,5	163	460	R25	R22	1T0823359, 1T0823359A	GS0802
Caddy III (2KA, 2KH)		03/04→	10	22	720	280	870	R22	R22	2K0827550, 2K0827550A	GS0816
Caddy III (2KB, 2KJ)		03/04→	8	19	404,5	163	460	R25	R22	1T0823359, 1T0823359A	GS0802
Caddy III (2KB, 2KJ)		03/04→	10	22	720	280	870	R22	R22	2K0827550, 2K0827550A	GS0816
Caddy Maxi		2008→	8	19	404,5	163	460	R25	R22	1T0823359, 1T0823359A	GS0802
Caddy Maxi		2008→	10	22	720	280	870	R22	R22	2K0827550, 2K0827550A	GS0816
Corrado (53I)		08/88→12/95	8	19	640	235	390	R22	R38	535827550A	GS0564
Eos		03/06→	8	19	735	321	300	R28	R22	1Q0823359	GS0804
Eos		03/06→	8	19	500	208	375	R22	R22	1Q0827550A, 1Q0827550B	GS0818
Fox (5Z1)		10/03→	8	19	463	185	360	R25	R22	5Z6827550B	GS0861
Golf I (17)		04/74→07/83	8	19	499	207	480	R2	R9	171827550A	GS0072
Golf II (19E)	up to Vet. 19E780000	08/83→06/84	8	19	500	200	270	R22	R35	1918827550	GS0565
Golf II (19E)	from Vet. 19E780001	06/84→10/91	8	19	500	200	280	R22	R22	1918827550A	GS0038
Golf III (1H1)		11/91→08/97	8	19	500	212	350	R22	R22	1H6827550, 1H6827550A	GS0048
Golf III (1E7)		07/93→05/98	10	22	175	45	700	R22	R22	1E0827550, 1E0827550B	GS0740
Golf III Cabrio (1E7)	from Vet. 1E1K010829	01/98→01/01	8	19	500	200	350	R25	R22	8L0823359	GS0260
Golf III Cabrio (1E7)	from Vet. 1E1K010830	01/01→02/02	8	19	500	200	350	R25	R22	8J0823359C	GS0263
Golf III Variant (1H5)		07/93→04/99	8	19	585	235	360	R22	R22	1H9827550A	GS0190

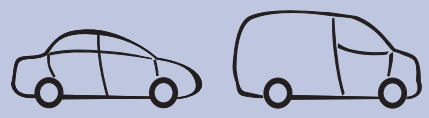

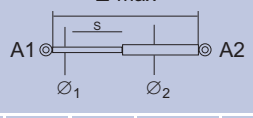

Ø1 [mm]	Ø2 [mm]	L max	S [mm]	F [N]	A1	A2	O.E.	

VOLKSWAGEN

			Ø1 [mm]	Ø2 [mm]	L max	S [mm]	F [N]	A1	A2	O.E.	
Golf IV (1J)		08/97→98	8	19	500	200	350	R25	R22	8J0823359, 8J0823359A, 8L0823359	GS0260
Golf IV (1J)		37167	8	19	500	200	350	R25	R22	8J0823359C	GS0263
Golf IV (1J1)		08/97→10/03	8	19	500	205	500	R25	R22	1J6827550	GS0131
Golf IV (1J5)		08/97→	8	19	500	205	500	R25	R22	1J6827550C, 1J9827550	GS0131
Golf V (1K1)		10/03→	10	22	450	168	535	R25	R22	1K6827550D	GS0184
Golf V (1K1), Golf V (1K5) Variant		10/03→07/08	8	19	730	320	250	R28	R22	1K0823359A	GS0801
Golf V (1K5) Variant		06/07→06/09	8	19	528	212	420	R22	R28	1K9827550A	GS0820
Golf V Plus (5M1)		01/05→	8	19	480	200	550	R22	R28	5M0827550, 5M0827550A	GS0857
Golf VI	maska silnika	10/08→	8	19	728	310	265	R28	R22	5K0823359D	GS0673
Golf VI		10/08→	8	19	439,5	157	550	R25	R22	5K6827550B	GS0680
Jetta III (1K2)		08/05→	8	19	730	320	250	R28	R22	1K0823359A	GS0801
Jetta III (1K2)		08/05→	10	22	300	70	710	R23	R23	1K5827550C	GS0817
Lupo (6X, 6E) without GTI, FSI, TDI	up to Vet. 6X1049577	04/98→11/00	8	19	500	200	280	R25	R22	6X0823359A, 6E0827550C	GS0194
Lupo (6X, 6E) without GTI, FSI, TDI	up to Vet. 6X1049577	04/98→11/00	8	19	500	200	350	R25	R22	6X0827550, 6X0827550A, 8L0823359	GS0260
Lupo (6X, 6E) without GTI, FSI, TDI	from Vet. 6X1049578	11/00→	8	19	479	180	300	R25	R22	6X0823359C	GS0335
Lupo (6X, 6E) FSI, TDI	from Vet. 6E1010000	11/00→	8	19	499	200	365	R25	R22	6E0827550B	GS0198
Lupo (6X, 6E) GTI		04/98→	8	19	499	200	365	R25	R22	6E0827550B	GS0198
Lupo (6X, 6E) GTI, FSI, TDI		04/98→	8	19	500	200	190	R25	R22	6X0823359B	GS0286
Multivan V		04/03→	10	28	755	210	1080	R22	R22	7H0827550B	GS0567
nadbudówka samochodu VW	Flap of additional storey		8	19	584	250	200	R21	R21		GS0082
nadbudówka samochodu VW	Flap of additional storey		8	19	685,5	300	200	R21	R21		GS0083
New Beetle (9C)		01/98→	8	19	599	244	330	R22	R22	1C0827550A, 1C0827550B, 1C0827550C, 1C0827550D	GS0323
New Beetle (9C)		01/98→	8	19	679	270	270	R22	R22	1C0823359B, 1C0823359C, 1C0823359D	GS0387
New Beetle Convertible (1Y7)		09/02→	8	19	201	52	250	R25	R22	1Y0827550B, 1Y0827550D, 1Y0827550F	GS0856
Passat III Variant (35I)		02/88→05/97	8	19	515	210	500	R25	R25	333827550, 3A9827550	GS0122
Passat IV (3B2)		08/96→11/00	8	19	279	95	490	R22	R22	3B5827550	GS0134
Passat IV (3B2)(3B5)		08/96→11/00	8	19	722	306	280	R22	R22	3B0823359, 3B0823359B	GS0265
Passat IV Variant (3B5)		06/97→11/00	8	19	499	205	470	R25	R22	3B9827550	GS0183
Passat V (3B3)		09/00→	8	19	279	95	520	R22	R22	3B5827550E	GS0432
Passat V (3B3)(3B6)		09/00→	8	19	722	306	280	R22	R22	3B0823359B	GS0265
Passat V Variant (3B6)		09/00→	8	19	500	205	500	R25	R22	1J6827550, 1J6827550C	GS0131
Passat VI (3C2)		03/05→	8	19	375	140	390	R22	R28	3C5827550A, 3C5827550B, 3C5827550C	GS0895
Passat VI (3C2), (3C5)		03/05→	8	19	730	310	380	R28	R22	3C0823359, 3C0823359A	GS0894

MAGNETI MARELLI

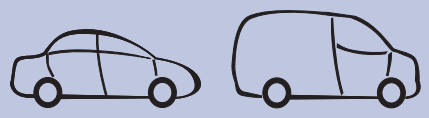

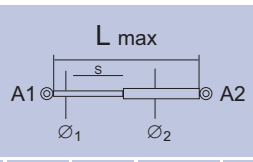

O.E.

MAGNETI MARELLI

VOLKSWAGEN

		Ø1 [mm]	Ø2 [mm]	L max	S [mm]	F [N]	A1	A2	O.E.	
Passat VI Variant (3C5)	08/05→	8	19	450	180	550	R22	R25	3C9827550, 3C9827550A	GS0896
Passat CC	06/08→	8	18,5	690	280	380	R28	R22	3C8823359	GS0688
Polo (6N1)	10/94→10/99	8	19	431	173	380	R22	R22	6N0827550A	GS0144
Polo (6N2)	10/99→09/01	8	19	431	173	380	R22	R22	6N0827550A	GS0144
Polo (6N2)	10/99→09/01	8	19	585	235	250	R22	R22	6N0823359	GS0264
Polo (86C)	10/81→04/86	8	19	515	215	550	R23	R9	867827550, 7827550A	GS0637
Polo (86C)	05/86→07/90	8	19	515	210	550	R22	R22	867827550C	GS0175
Polo (86C)	07/90→09/94	8	19	507	207	550	R22	R22	867827550D	GS0176
Polo (9N)	10/01→	8	19	500	200	310	R25	R22	6Q0823359, 6Q0823359A	GS0492
Polo (9N)	10/01→	8	19	500	200	380	R25	R22	6Q6827550	GS0193
Polo (9N)	10/01→	8	19	500	200	400	R25	R22	6Q6827550, 6Q6827550A	GS0195
Polo Cassic (6KV5)	02/97→07/99	8	19	284	100	330	R21	R21	6K5827550A	GS0062
Polo Variant (6KV5)	04/97→09/01	8	19	500	204	480	R25	R25	6K0827550, 6K0827550A	GS0099
Polo IV sedan	09/02→2009	8	19	255	85	600	R25	R22	6Q5827550A, 6Q5827550B	GS0814
Sharan (7M)	08/00→	8	19	452	177	350	R25	R25	7M3827550A	GS0481
Sharan (7M)	09/95→07/00	10	22	593	200	830	R22	R22	7M0827550D, 7M0827550F, 7M0827550G	GS0126
Sharan (7M)	08/00→	10	22	593	200	830	R22	R22	7M0823359G	GS0126
Sirocco (137)	09/08→	8	18,5	457	167	320	R22	R22	1K8827550A	GS0689
Sirocco II (53B)	08/80→07/92	8	19	499	205	460	R2	R23	533827550, 533827550A	GS0742
Sirocco III (53B)	08/87→07/92	8	19	499	205	460	R2	R23	533827550A	GS0742
Tiguan	09/07→	8	19	494	172	500	R28	R28	5N0827550A	GS0902
Touareg (7LA)	10/02→	8	19	538	190	125	R22	R22	7L6823359B	GS0353
Touareg (7LA)	tailgate window 10/02→05/10	8	19	315	100	550	R25	R25	7L6845587, 7L6845587A	GS0858
Touran (1T1, 1T2)	02/03→12/06	8	19	404,5	163	460	R25	R22	1T0823359, 1T0823359A	GS0802
Touran (1T1, 1T2)	02/03→2010	10	22	505	170	770	R22	R28	1T0827550A, 1T0827550B, 1T0827550C, 1T0827550D, 1T0827550E	GS0809
Transporter IV	05/98→04/03	6	16	285	100	300	R25	R25	7D0823359A	GS0752
Transporter T3	M308 hydro lift version for Vet. 25C102001 - 25N015000 05/79→07/92	8	19	514	200	300	R2	R22	251829331B, 251829332	GS0638
Transporter T3	from Vet. →H10 (without version M308 hydro lift) 07932, →H8000100 05/79→07/92	8	19	514,5	217	610	R21	R35	251829331A, 251829331	GS0105
Transporter T4	and heated window up to Vet. 70N151781 01/90→07/92	10	22	569	240	830	R21	R21	701829331H	GS0104
Transporter T4	from Vet. 70N151781 07/92→	10	28	686	255	710	R22	R22	701829331Q	GS0117
Transporter T4	up to Vet.. 70N151781 01/90→07/92	10	22	569	225	660	R22	R22	701829331F	GS0244
Transporter T4	up to Vet. 70N151781 01/90→07/92	10	22	569	225	750	R22	R22	701829331G	GS0245
Transporter T4	(ver. "Trim") up to Vet. 70N151781 01/90→07/92	10	22	567	225	910	R22	R22	701829331J	GS0246
Transporter T4	ver. hydro lift from Vet. 70N151781 07/92→	10	22	567	225	460	R22	R22	701829331T	GS0247
Transporter T4	from Vet. 70N151781 07/92→	10	28	686	255	770	R22	R22	701829331R	GS0248

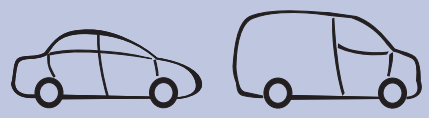

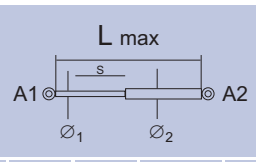

O.E.

			Ø1 [mm]	Ø2 [mm]	L max	S [mm]	F [N]	A1	A2		
VOLKSWAGEN											
Transporter T4	and heated window from Vet. 70N151781	07/92→	10	28	686	255	910	R22	R22	701829331AB	GS0249
Transporter T4	(ver. "Trim") from Vet. 70N151781	07/92→	10	28	686	255	830	R22	R22	701829331S	GS0250
Transporter T5		04/03→	10	28	755	210	970	R22	R22	7H0827550	GS0566
Transporter T5	modele Caravelle, Multivan	04/03→	8	19	390	155	360	R22	R28	7H0823359A, 7H0823359B, 7H0823359C	GS0897
Vento (1H2)		11/91→09/98	10	22	260	80	690	R22	R25	1H5827550A, 1H5827550B	GS0225
ZASTAVA											
101		→81	8	19	450	180	300	R21	R21		GS0003
128		→81	8	19	450	180	300	R21	R21		GS0003
Yugo		79→81	8	19	460	170	220	R21	R21	46636020, 46636021	GS0028
Yugo Coral		→80	8	19	589	239	310	R21	R21	46636022	GS0029
Yugo Florida		→89	8	19	365	140	600	R2	R9	46635997	GS0008
Yugo Florida Poly			8	19	460	170	270	R21	R21	46622166	GS0096
ZAZ											
Tavria 1102		→89	8	19	450	175	280	R21	R21	11026308016	GS0035
Tavria 1103		→99	8	19	500	200	400	R21	R21	126308506	GS0114
Tavria 1105		→91	8	19	502	200	280	R21	R21	1216308506	GS0071
Tavria 11055		→99	8	19	450	175	160	R21	R21	1326308506	GS0115

Applicazione per codice
Buyers guide
Zuordnung nach Bestellnummer
Affectations par références
Aplicación por código
Aplicação por código
Εφαρμογες ανα κωδικο
Zastosowanie dla kodu
Применение для кода
Koda göre araç uygulaması

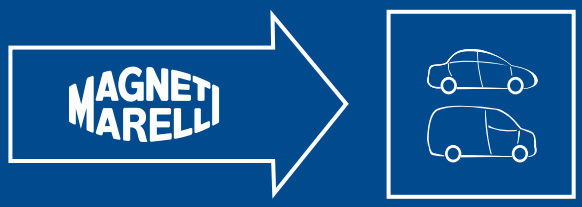

					Ø1 [mm]	Ø2 [mm]	L max	S [mm]	F [N]	A1	A2	O.E.
GS0001	DAEWOO-FSO	Polonez		1978→93	8	19	405	160	390	R2	R9	4369120
GS0002	DAEWOO-FSO Lublin	Lublin	-	→	8	19	509	200	400	R2	R9	
GS0002	DAEWOO-FSO Lublin	Żuk	-	→	8	19	509	200	400	R2	R9	
GS0003	FIAT	128		→81	8	19	450	180	300	R21	R21	
GS0003	ZASTAVA	101		→81	8	19	450	180	300	R21	R21	
GS0003	ZASTAVA	128		→81	8	19	450	180	300	R21	R21	
GS0004	MOSKWICZ	2141		86→98	8	19	502	200	400	R21	R21	21416306206
GS0004	MOSKWICZ	2335		→86	8	19	502	200	400	R21	R21	21416306206
GS0004	RENAULT	R 19 I (B/C53)		11/88→04/92	8	19	502	200	400	R21	R21	7700786247, 7700799026
GS0005	SKODA	Favorit	all include Forman	→10/93	8	19	509	207	420	R22	R22	441964920386
GS0006	FIAT	126 Bis		87→99	8	19	550	212	230	R3	R10	7550938
GS0007	DAEWOO-FSO	Polonez Caro		1993→2002	8	19	405	160	500	R2	R9	041190, 077187
GS0008	ZASTAVA	Yugo Florida		→89	8	19	365	140	600	R2	R9	46635997
GS0009	FIAT	127L, C, CL	3	04/77→09/81	8	19	600	255	180	R2	R9	4392129
GS0010	CITROËN	GSA		79→86	8	19	600	255	200	R2	R9	75521825, 7552182580
GS0010	FIAT	127	5	04/77→09/81	8	19	600	255	200	R2	R9	4392R280
GS0010	FIAT	Ritmo I		78→07/83	8	19	600	255	200	R2	R9	4392R280
GS0010	FIAT	Strada		78→07/83	8	19	600	255	200	R2	R9	39401990
GS0010	SEAT	127, Fura (025A)	3	77→12/86	8	19	600	255	200	R2	R9	XO39401990
GS0010	SEAT	Ritmo/Roda (02R2)		78→07/83	8	19	600	255	200	R2	R9	XO39401990
GS0011	CITROËN	GS Break		71→80	8	19	600	255	360	R2	R9	95492745
GS0011	CITROËN	GSA Break		09/71→08/85	8	19	600	255	360	R2	R9	7552182580
GS0011	FIAT	128 Familiare		69→85	8	19	600	255	360	R2	R9	4392120, 5975342
GS0011	FIAT	Ritmo II		07/83→88	8	19	600	255	360	R2	R9	4392120, 5975342
GS0011	FIAT	Strada		07/83→88	8	19	600	255	360	R2	R9	39462450
GS0011	SEAT	128		69→85	8	19	600	255	360	R2	R9	XO39440480
GS0011	SEAT	Ritmo/Roda (02R2)		07/83→11/88	8	19	600	255	360	R2	R9	XO39462450, SE02252620A
GS0012	FIAT	Uno		83→89	8	19	600	245	410	R22	R22	5993542
GS0014	FIAT	Tipo	from Vet. 0043620,2129640, 2162445, 4075920, 454677	03/93→04/95	8	19	584	234	280	R22	R22	7671700
GS0015	FIAT	127	5	06/71→03/77	8	19	549	229,5	350	R2	R9	4297742
GS0015	FIAT	127 Panorama		06/71→03/77	8	19	549	229,5	350	R2	R9	4297742
GS0015	SEAT	127, Fura (025A)	5	71→77	8	19	549	229,5	350	R2	R9	XO42977420
GS0016	FIAT	Panda (141A)		05/80→09/86	8	19	549	229,5	240	R2	R10	4483658
GS0016	FIAT	Panda (141A)	up to Vet. 6314421/5370347	10/86→12/96	8	19	549	229,5	240	R2	R10	4483658
GS0016	SEAT	Marbella (028)		08/86→10/98	8	19	549	229,5	240	R2	R10	XO39553290, SE028526200B
GS0016	SEAT	Panda		05/80→09/86	8	19	549	229,5	240	R2	R10	XO44836580, SE14523200A
GS0017	AUTOBIANCHI	A112		69→87	8	19	362	R285	190	R22	R10	4484653, 4480856
GS0018	FIAT	R282		72→86	8	19	256	86	280	R2	R9	4405569
GS0019	CITROËN	Visa		78→12/82	8	19	600	255	500	R2	R9	95496R284

MAGNETI MARELLI

					L max						O.E.
					Ø1 [mm]	Ø2 [mm]	L max	S [mm]	F [N]	A1	A2	
GS0019	CITROËN	Visa		01/83→89	8	19	600	250	500	R2	R9	9558825480
GS0020	PEUGEOT	205 I, 205 II		02/82→07/96	8	19	600	230	290	R22	R22	9256119680
GS0021	RENAULT	R Super 5		01/85→06/91	8	19	700	251	200	R22	R22	7702144629
GS0022	SEAT	Ibiza I (021A)		06/84→12/93	8	19	696	278	220	R2	R9	XO39503120, XO39507910, SE021526200A
GS0023	FORD	Fiesta II		08/83→03/89	8	19	614	230	330	R22	R22	84FBB406A10BB
GS0024	IŻ	2126		→93	8	19	450	175	340	R21	R21	21086308015
GS0024	IŻ	2717			8	19	450	175	340	R21	R21	21086308015
GS0024	LADA Niva	212R28, 21214, 21215, 21216, 21217		→94	8	19	450	175	340	R21	R21	21086308010, 21086308015, 212R286308010, 212R286308015
GS0024	LADA	Niva 2R281		→94	8	19	450	175	340	R21	R21	21086308015, 212R286308015
GS0024	LADA	Oka 1111		→90	8	19	450	175	340	R21	R21	21086308015
GS0024	LADA	Samara 2108		84→03	8	19	450	175	340	R21	R21	21086308015
GS0024	LADA	Samara 2109		88→04	8	19	450	175	340	R21	R21	21086308015
GS0024	LADA	Samara II 2114		01→	8	19	450	175	340	R21	R21	21086308015
GS0024	LADA	Samara II 21R28		00→	8	19	450	175	340	R21	R21	21086308015
GS0024	TWEKS (ТВЭКС)	ВГ-05	engine hood - digger		8	19	450	175	340	R21	R21	21086308015
GS0025	LADA	2110	(with ball stud)	→96	8	19	450	175	260	R21	R21	21216308015
GS0025	LADA	2111	(with ball stud)	→97	8	19	450	175	260	R21	R21	21216308015
GS0025	LADA	2112	(with ball stud)	→99	8	19	450	175	260	R21	R21	21216308015
GS0025	LADA	Niva 2121, 21211, 21212	(with ball stud)	77→94	8	19	450	175	260	R21	R21	21216308015
GS0025	UAZ	3160	(with ball stud)	→99	8	19	450	175	260	R21	R21	21216308015
GS0026	SKODA	Favorit pick-up	with additional storey	89→94	8	19	528	224	160	R21	R21	
GS0027	DAEWOO-FSO	Polonez Truck		→	8	19	587	237	280	R21	R21	043882, 01171783
GS0028	ZASTAVA	Yugo		79→81	8	19	460	170	220	R21	R21	46636020, 46636021
GS0029	ZASTAVA	Yugo Coral		→80	8	19	589	239	310	R21	R21	46636022
GS0030	FIAT	R282		72→86	8	19	256	86	180	R2	R9	21083
GS0031	DAEWOO	Nexia/Cielo		02/95→	8	19	549	232	355	R22	R22	90159607
GS0031	OPEL	Kadett E		09/84→08/91	8	19	549	232	355	R22	R22	90159607
GS0031	VAUXHALL	Astra Mk II		09/84→08/91	8	19	549	232	355	R22	R22	90159607
GS0032	OPEL	Vectra A		04/88→09/95	8	19	473	188	530	R21	R21	90227936
GS0032	VAUXHALL	Cavalier Mk III		04/88→09/95	8	19	473	188	530	R21	R21	90227936
GS0033	CITROËN	ZX (N2)		09/91→06/97	8	19	600	250	320	R21	R21	96027543, 9602754380
GS0034	FIAT	127		09/81→86	8	19	585	250	200	R2	R9	39401990
GS0035	ZAZ	Tavria 1102		→89	8	19	450	175	280	R21	R21	11026308016
GS0036	SKODA	Favorit pick-up	with additional storey	91→95	8	19	516	207	220	R2	R9	441564420066
GS0037	SKODA	Forman Plus	with additional storey	→09/94	8	19	700	300	325	R22	R28	441664420076
GS0038	FIAT	Stilo (192)		10/01→	8	19	500	200	280	R22	R22	46784590
GS0038	VW	Golf II (19E)	from Vet. 19E780001	06/84→10/91	8	19	500	200	280	R22	R22	1918827550A
GS0039	FIAT	Panda (141A)	from Vet. 6314422/5370348	10/86→12/96	8	19	550	229	380	R2	R10	7550172

					L max							O.E.
					Ø1 [mm]	Ø2 [mm]	L max	S [mm]	F [N]	A1	A2	
GS0040	FIAT	Uno (146) Restyling		→89	8	19	569	220	280	R22	R22	7636049
GS0040	INNOCENTI	Mille		→94	8	19	569	220	280	R22	R22	7636049
GS0041	AUSTIN	Mini Metro		→80	8	19	542	210	300	R22	R22	AFP1282
GS0041	FIAT	Regata Weekend		03/85→12/89	8	19	542	210	300	R22	R22	5981660
GS0041	MG	Metro		→80	8	19	542	210	300	R22	R22	AFP1282
GS0041	ROVER	Metro (XF)		84→89	8	19	542	210	300	R22	R22	AFP1282
GS0041	ROVER	Mini Metro		→80	8	19	542	210	300	R22	R22	AFP1282
GS0042	FIAT	R281 Familiare/Panorama		06/74→07/86	8	19	600	255	310	R2	R9	4418499
GS0042	SEAT	R281		06/75→12/86	8	19	600	255	310	R2	R9	XO39303770
GS0043	FIAT	Croma		12/85→12/96	8	19	490	180	480	R2	R9	82429686
GS0044	DAEWOO-FSO	Polonez Cargo/Sanitarka		1993→2002	8	19	405	160	550	R21	R21	58084
GS0044	SKODA	Octavia (1U5)		07/98	8	19	405	160	550	R21	R21	1U9827550A, 1U9827550B
GS0045	DAEWOO-FSO	Polonez Truck			8	19	700	300	260	R21	R21	21273
GS0046	SKODA	-	Trading, additional storey Furgon		8	19	509	207	220	R22	R22	
GS0048	VW	Golf III (1H1)		11/91→08/97	8	19	500	212	350	R22	R22	1H6827550, 1H6827550A
GS0049	FIAT	Uno	FE.OA5 Restyling	→89	8	19	567,5	220	280	R21	R21	7636049
GS0050	DAEWOO	Tico		02/95→01	10	22	726	280	420	R25	15a	81850A70B02000
GS0051	DAEWOO-FSO	Polonez Truck	additional storey mfg. by Z.P. BELLA	→93	8	19	700	300	200	R21	R21	2R2831
GS0052	DAEWOO-FSO	Polonez Truck	additional storey mfg. by Z.P. BELLA	→	8	19	550	212	350	R21	R21	2R2833
GS0053	OPEL	Corsa B	3	03/93→09/00	8	19	543,5	206	360	R21	R21	90481270
GS0053	VAUXHALL	Corsa Mk I	3	03/93→09/00	8	19	543,5	206	360	R21	R21	90481270
GS0054	FIAT	Ritmo Bertone Cabrio		83→88	8	19	549,5	229,5	160	R2	R9	
GS0055	INNOCENTI	Mini 90/120 serie I		74→82	8	19	520	2R28	230	R2	R9	53471007
GS0056	SKODA	Felicia van plus	with additional storey	→94	8	19	700	300	325	R28	R25	441664420086
GS0057	DAEWOO-FSO	Polonez Atu		1995→2002	8	19	256	86	280	R2	R9	63397
GS0058	DAEWOO-FSO	Polonez Truck	additional storey mfg. by LAMIPLAST	→	8	19	550	212	270	R3	R10	2R2877
GS0059	DAEWOO-FSO	Polonez Caro		93→02	8	19	405	160	500	R2	R9	77187
GS0060	SKODA	Favorit		→10/93	8	19	527	219	450	R22	R22	441964420486
GS0060	SKODA	Felicia		94→	8	19	527	219	450	R22	R22	6U0827551A, 6U0827551B, 441964420476
GS0060	SKODA	Felicia		94→	8	19	527	219	450	R22	R22	6U0827551A, 6U0827551B, 441964420476
GS0060	SKODA	Felicia		→94	8	19	527	219	450	R22	R22	6U0827551A, 6U0827551B, 441964420476
GS0060	SKODA	Forman		→10/93	8	19	527	219	450	R22	R22	441964420486
GS0061	DAEWOO-FSO	Polonez Truck	additional storey mfg. by ATAREX	08/93→	8	19	587	237	200	R21	R21	21406
GS0062	SEAT	Cordoba I (6K2/C2)		02/93→06/99	8	19	284	100	330	R21	R21	6K5827550, W06K5827550
GS0062	VW	Polo Cassic (6KV5)		02/97→07/99	8	19	284	100	330	R21	R21	6K5827550A
GS0063	FIAT	Duna Weekend (14R20)		01/87→12/91	8	19	527	219	520	R21	R21	7516691
GS0063	FIAT	Elba		01/92→12/96	8	19	527	219	520	R21	R21	7516691
GS0063	INNOCENTI	Elba		92→96	8	19	527	219	520	R21	R21	7516691

MAGNETI MARELLI

MAGNETI MARELLI					L max A1 s A2 Ø1 Ø2							O.E.
					Ø1 [mm]	Ø2 [mm]	L max	S [mm]	F [N]	A1	A2	
GS0064	FIAT	Uno (146)		83→89	8	19	600	245	430	R22	R22	5993542
GS0065	FIAT	Tipo 160 AE.OA.5		88→	8	19	584	234	290	R22	R22	7671700
GS0066	PEUGEOT	504 Break		06/74→06/83	8	19	600	255	450	R2	R9	873143, 7920062656
GS0067	FIAT	Brava		10/95→10/01	8	19	515	202	370	R21	R21	7769737, 46783650
GS0068	FIAT	Bravo		10/95→10/01	8	19	470	196	350	R21	R21	7774707
GS0069	DAEWOO-FSO	Polonez Caro		1993→2002	8	19	405	160	500	R2	16a	21457
GS0070	DAEWOO-FSO	Polonez		78→93	8	19	405	160	390	R2	16a	21458
GS0071	ZAZ	Tavria 1105		→91	8	19	502	200	280	R21	R21	1216308506
GS0072	VW	Golf I (17)		04/74→07/83	8	19	499	207	480	R2	R9	171827550A
GS0073	FIAT	Ducato	risable	5/81→03/94	10	22	798	350	500	R30	2d	4424045
GS0073	FIAT	Talento	- risable	03/89→03/94	10	22	798	350	500	R30	2d	4424045
GS0074	DAEWOO-FSO	Polonez Caro Plus		1997→2002	8	19	405	160	600	R2	R35	77763
GS0075	FORD	Transit		09/85→07/91	10	22	550	235	850	R21	R21	86VBV406A10CA
GS0076	OPEL	Astra Classic	3 5	09/91→01/98	8	19	591	242	350	R22	R22	90341282
GS0076	OPEL	Astra F	3 5	09/91→01/98	8	19	591	242	350	R22	R22	90341282
GS0076	VAUXHALL	Astra Mk III	3 5	09/91→01/98	8	19	591	242	350	R22	R22	90341282
GS0077	FIAT	Marea Weekend (185)		09/96→	8	19	508	210	420	R25	R25	46420780
GS0078	FIAT	Punto (176)		09/93→08/99	8	19	445	182	300	R21	R21	7734566
GS0079	FORD	Sierra L, GL, GHIA		08/82→02/93	8	19	495	192	500	R22	R22	83BBA406A10AD
GS0079	TOYOTA	Corolla	5	04/97→01/02	8	19	495	192	500	R22	R22	
GS0080	FIAT	Cinquecento		07/91→01/98	8	19	569	242	210	R22	R22	46835404, 46453503
GS0080	FIAT	Seicento		98→	8	19	569	242	210	R22	R22	46835404, 46453503
GS0081	OPEL	Vectra B	5 up to Vet. -W5999999-W7999999	10/95→98	8	19	469,5	171	560	R21	R21	90463749
GS0081	VAUXHALL	Vectra Mk I	5 up to Vet. -W5999999-W7999999	10/95→98	8	19	469,5	171	560	R21	R21	90463749
GS0082	VW	nadbudówka samochodu VW	Flap of additional storey		8	19	584	250	200	R21	R21	
GS0083	VW	nadbudówka samochodu VW	Flap of additional storey		8	19	685,5	300	200	R21	R21	
GS0084	OPEL	Vectra B		10/95→04/02	10	22	249	67	850	R21	R21	90463721, 1180402
GS0084	VAUXHALL	Vectra Mk I, Vectra Caravan Mk I		10/95→04/02	10	22	249	67	850	R21	R21	90463721, 1180402
GS0085	FIAT	Palio Weekend (178DX)		04/96→	8	19	519	200	570	R25	R25	46524047, 46524049, 46524051
GS0085	NISSAN	Primera (P12)		07/02→	8	19	527	180	575	R25	R25	90452AU200
GS0086	DAEWOO	Lanos		05/97→	8	19	473	172	420	R22	R22	96306157, 96324117, 96324119
GS0087	OPEL	Agila	R (kei car)	04/00→	8	19	645	202,6	470	R32	R33	9209569, 4705436, 9210307, 4705684
GS0087	SUZUKI	Wagon + (MM)	L	05/00→	8	19	645	202,6	470	R32	R33	8185083E10, 8185084E00
GS0087	VAUXHALL	Agila	R	09/00→	8	19	645	202,6	470	R32	R33	9209569, 4705436, 9210307, 4705684
GS0088	OPEL	Agila	L	09/00→	8	19	645	202,6	470	R32	R33	9209570, 4705437, 9210308, 4705685
GS0088	SUZUKI	Wagon + (MM)	L	05/00→	8	19	645	202,6	470	R32	R33	8186083E10, 8186084E00
GS0088	VAUXHALL	Agila	L	09/00→	8	19	645	202,6	470	R32	R33	9209570, 4705437, 9210308, 4705685

					L max							O.E.
					Ø1 [mm]	Ø2 [mm]	L max	S [mm]	F [N]	A1	A2	
GS0089	DAEWOO-FSO	Polonez		99→02	8	19	450	180	450	R21	R21	81768
GS0090	SUZUKI	Swift	R	03/89→	8	19	613,8		190	R34	R24	8180062831, 818506R320
GS0091	SUZUKI	Swift	L	03/89→	8	19	613,8		190	R34	R24	8180062841, 818606R320
GS0092	RENAULT	Clio I		01/91→08/98	8	19	471	191	360	R25	R25	7700800311, 7700272026
GS0093	RENAULT	R 19 II (B/C53)		04/92→12/95	8	19	500	204	500	R21	R21	7700818237
GS0094	DAEWOO	Nubira		05/97→03	8	19	324	115	290	R21	R21	96298318, 96557530
GS0095	CHEVROLET	Nubira		05/97→03	8	19	447	172	500	R21	R21	96306833, 96557538
GS0095	DAEWOO	Nubira		05/97→03	8	19	447	172	500	R21	R21	96306833, 96557538
GS0096	ZASTAVA	Yugo Florida Poly			8	19	460	170	270	R21	R21	46622166
GS0097	CHEVROLET	Spark/Matiz		09/98→	8	19	496	188	270	R28	R28	96598008, 96507773, 96314606, 96563503, 96518910, 96557539
GS0097	DAEWOO	Matiz		09/98→	8	19	496	188	270	R28	R28	96598008, 96507773, 96314606, 96563503, 96518910, 96557539
GS0098	SKODA	Felicia pick-up	with additional storey	→94	8	19	528	224	220	R21	R21	
GS0099	SEAT	Altea (5P1)		03/04→	8	19	500	204	480	R25	R25	5P0827550A
GS0099	SEAT	Cordoba I Vario (6K5)		09/96→06/99	8	19	500	204	480	R25	R25	6K0827550, 6K0827550A
GS0099	SEAT	Cordoba II Vario (6K5)		06/99→	8	19	500	204	480	R25	R25	6K0827550, 6K0827550A
GS0099	VW	Polo Variant (6KV5)		04/97→09/01	8	19	500	204	480	R25	R25	6K0827550, 6K0827550A
GS0013	FIAT	Tipo	up to Vet. 0043620, 2129640, 2162445, 4075920, 454677	07/87→03/93	8	19	595	235	280	R22	R22	7587706
GS0100	FIAT	Panda (169)		09/03→	8	19	502	209	280	R25	R25	46827091
GS0101	MERCEDES	190/190E (W 201)		10/82→08/93	8	19	788	342	280	R2	R20	0009802464, 0009802564, 0009803764
GS0102	OPEL	Omega B		02/94→07/03	8	19	510	202	620	R22	R22	90379081
GS0102	VAUXHALL	Omega Caravan		02/94→07/03	8	19	510	202	620	R22	R22	90379081
GS0103	AUDI	80, 80 Quatro (8C,B4)		08/91→10/94	8	19	280	95,5	630	R21	R25	R23582755R2
GS0104	VW	Transporter T4	and heated window up to Vet. 70N151781	01/90→07/92	10	22	569	240	830	R21	R21	701829331H
GS0105	VW	Transporter T3	from Vet. →H10 (without version M308 hydro lift) 07932 →H8000100	05/79→07/92	8	19	514,5	217	610	R21	R35	251829331A, 251829331
GS0106	LADA	2111		→97	8	19	602	252	430	R21	R21	21118231010
GS0107	LADA	2112		→99	8	19	450	170	460	R21	R21	21128231010
GS0108	FORD	Escort VI, VII		05/92→09/00	8	19	544	207	495	R21	R21	93ABA406A10C1B, 91ABA406A10C1E, 6723080, 6900217
GS0109	FORD	Scorpio I		01/85→09/94	8	19	500	170	635	R21	R21	85GBA406A10CD
GS0110	AUDI	100 (A4,C4)		12/90→07/94	8	19	402	160	390	R21	R21	R95827552
GS0110	AUDI	A6 (A4,C4)		06/94→08/97	8	19	402	160	390	R21	R21	R95827552
GS0111	INNOCENTI	Mille		→94	8	19	567,5	220	280	R21	R21	7636049
GS0112	CITROËN	Berlingo		07/96→	8	19	700	300	670	R23	R23	8731
GS0112	PEUGEOT	Partner		07/96→	8	19	700	300	670	R23	R23	8731
GS0114	ZAZ	Tavria 1103		→99	8	19	500	200	400	R21	R21	126308506
GS0115	ZAZ	Tavria 11055		→99	8	19	450	175	160	R21	R21	R2826308506
GS0116	NISSAN		Flap of additional storey		8	19	440	175	175	R25	R25	

MAGNETI MARELLI

						L max						O.E.
						Ø1 [mm]	Ø2 [mm]	L max	S [mm]	F [N]	A1	A2	
GS0117	VW	Transporter T4	from Vet. 70N151781	07/92→		10	28	686	255	710	R22	R22	701829331Q
GS0118	OPEL	Meriva		05/03→		8	19	540	196	540	R21	R21	5R282262, 93386999
GS0118	VAUXHALL	Meriva		05/03→		8	19	540	196	540	R21	R21	5R282262, 93386999
GS0119	OPEL	Corsa C		09/00→		8	19	475	196	350	R21	R21	9114311
GS0119	VAUXHALL	Corsa Mk II		09/00→		8	19	475	196	350	R21	R21	9114311
GS0120	TOYOTA	Avensis		09/97→04/03		8	19	450	170	600	R21	R21	
GS0121	HONDA	Civic V Aerodeck (MC)		04/98→02/01		8	19	582	228	500	R25	R25	74820S1EE01
GS0122	VW	Passat III Variant (35I)		02/88→05/97		8	19	515	210	500	R25	R25	333827550, 3A9827550
GS0123	SEAT	Toledo I (1L)		01/91→03/99		8	19	515	195	500	R22	R22	1L0827550, 1L0827550A, W1L0827550
GS0124	OPEL	Astra F	with loudspeakers	09/91→01/98		8	19	508	195	600	R22	R22	9034R2878
GS0124	VAUXHALL	Astra Caravan Mk III	with loudspeakers	09/91→01/98		8	19	508	195	600	R22	R22	9034R2878
GS0125	FORD	Mondeo I		02/93→08/96		8	19	552	200	515	R25	R22	93BBA406A10AD, 93BBA406A10AE
GS0126	FORD	Galaxy		06/95→		10	22	593	200	830	R22	R22	7300069, 1009060, 1047212, 1094814, 95VW442K0R23E, 95VW442K0R23G, 95VW442K0R23H
GS0126	SEAT	Alhambra (7MS)		09/95→		10	22	593	200	830	R22	R22	7M0827550D, 7M0827550F, 7M0827550G
GS0126	VW	Sharan (7M)		09/95→07/00		10	22	593	200	830	R22	R22	7M0827550D, 7M0827550F, 7M0827550G
GS0126	VW	Sharan (7M)		08/00→		10	22	593	200	830	R22	R22	7M0823359G
GS0127	RENAULT	Kangoo		03/98→		10	22	690	280	630	R25	R25	7700303186, 7700303R289
GS0127	RENAULT	Kangoo Express		03/98→		10	22	690	280	630	R25	R25	7700303186
GS0128	CITROËN	Xsara (N1)		04/97→		8	19	622	240	360	R25	R25	8731E3, 9621907680, 9630753280
GS0129	RENAULT	Megane Scenic 95	with window that can be opened	01/97→08/99		8	19	595	212	515	R22	R22	7700828454
GS0129	RENAULT	Megane Scenic 99	without window that can be opened	09/99→06/03		8	19	595	212	515	R22	R22	7700828454
GS0129	RENAULT	Megane Scenic TT	with window that can be opened	09/99→06/03		8	19	595	212	515	R22	R22	7700828454
GS0130	RENAULT	Megane I (BA0)		01/96→11/02		8	19	440	160	450/500	R22	R22	7700828451, 7700843698
GS0131	VW	Bora Variant (1J6)		05/99→		8	19	500	205	500	R25	R22	1J6827550
GS0131	VW	Golf IV (1J1)		08/97→10/03		8	19	500	205	500	R25	R22	1J6827550
GS0131	VW	Golf IV (1J5)		08/97→		8	19	500	205	500	R25	R22	1J6827550C, 1J9827550
GS0131	VW	Passat V Variant (3B6)		09/00→		8	19	500	205	500	R25	R22	1J6827550, 1J6827550C
GS0132	PEUGEOT	106 I		01/91→04/96		8	19	600	250	250/310	R22	R22	873185, 873186, 9605478880, 9605478888
GS0133	PEUGEOT	106 II		05/96→		8	19	585	222	280	R22	R22	873191

					L max							O.E.
					Ø1 [mm]	Ø2 [mm]	L max	S [mm]	F [N]	A1	A2	
GS0134	AUDI	A4 (8D2,B5)		01/94→11/00	8	19	279	95	490	R22	R22	8D5827552, 8D5827552C, 8D5827552D, 8D5827552F
GS0134	AUDI	TT Coupe (8N)		06/98→	8	19	279	95	490	R22	R22	8N0823359
GS0134	AUDI	TT Roadster (8N)		06/98→	8	19	279	95	490	R22	R22	8N0823359
GS0134	SKODA	Fabia (6Y3)	4	04/01→	8	19	279	95	490	R22	R22	6Y5827550A
GS0134	VW	Bora (1J2)		10/98→	8	19	279	95	490	R22	R22	3B5827550A
GS0134	VW	Passat IV (3B2)		08/96→11/00	8	19	279	95	490	R22	R22	3B5827550
GS0135	FORD	Ka		09/96→	8	19	448	180	310	R22	R22	1025425, 97KGB406A10AA
GS0136	OPEL	Zafira		04/99→	10	22	535	176	630	R22	R22	90579440, 132742
GS0136	VAUXHALL	Zafira		04/99→	10	22	535	176	630	R22	R22	90579440, 132742
GS0137	OPEL	Astra G		01/98→03/04	8	19	566	204	500	R22	R22	90559245, 132739
GS0137	VAUXHALL	Astra Caravan Mk IV		01/98→03/04	8	19	566	204	500	R22	R22	90559245, 132739
GS0138	LANCIA	Y10 (156)		03/85→12/95	8	19	602	250	160	R25	R25	60617400, 7703325, 5970097
GS0139	SEAT	Ibiza II (6K1)		12/93→08/99	8	19	525	206	320	R22	R22	6K6827550, W06K6827550
GS0140	FORD	Fiesta III		03/89→04/93	10	22	567	221	590	R22	R22	89FBB406A10A1C
GS0141	FORD	Fiesta III		03/89→04/93	10	22	567	221	650	R22	R22	89FBB406A10B1C
GS0142	FORD	Fiesta III		04/93→03/96	8	19	574	235	260	R22	R22	93FBB406A10AA
GS0143	OPEL	Corsa B	5	03/93→09/00	8	19	565	216	360	R22	R22	90388707
GS0143	VAUXHALL	Corsa Mk I	5	03/93→09/00	8	19	565	216	360	R22	R22	90388707
GS0144	VW	Polo (6N1)		10/94→10/99	8	19	431	173	380	R22	R22	6N0827550A
GS0144	VW	Polo (6N2)		10/99→09/01	8	19	431	173	380	R22	R22	6N0827550A
GS0145	PEUGEOT	206		09/98→	8	19	510	210	340	R25	R25	8731E6, 51023704
GS0146	FORD	Fiesta III		04/93→03/96	8	19	576	235	310	R22	R22	93FBB406A10BA
GS0146	FORD	Fiesta IV		01/96→10/01	8	19	576	235	310	R22	R22	96FBB406A10AA, 96FBB406A10BA, 1008276, 108277
GS0146	MAZDA	121 (JASM, JBSM)		03/96→	8	19	576	235	310	R22	R22	96FBB406A10BA
GS0147	PEUGEOT	306 (R22/C)		06/94→04/01	8	19	600	230	300/360	R22	R22	873193, 9610016680, 9619988380
GS0148	CITROËN	Saxo		05/96→02/02	8	19	611	230	300/355	R22	R22	8731C0, 9618119180
GS0149	RENAULT	Megane Scenic 95	without window that can be opened	12/96→08/99	19	595	250	515	R22	R22	R22	-
GS0150	CITROËN	C3		02/02→	8	19	445	162	420	R22	R22	8731G3, 9639853880
GS0151	RENAULT	Megane Scenic 99	without window that can be opened	09/99→06/03	8	19	595	212	485	R22	R22	7700434465
GS0151	RENAULT	Megane Scenic TT	without window that can be opened	09/99→06/03	8	19	595	212	485	R22	R22	7700434465
GS0152	RENAULT	Megane Scenic 99	tailgate's window	09/99→06/03	8	19	460	169	100	R25	R25	7700430022
GS0153	HYUNDAI	Sonata IV (EF)		10/01→	8	19	298	83	500	R22	R22	817713D000, 817713D001, 817713D002
GS0153	VOLVO	S 40		07/95→01/04	8	19	298	83	500	R22	R22	30852059, 30852060
GS0154	RENAULT	Megane I Saloon (BA0)		03/99→11/02	8	19	440,5	160	520	R22	R22	7700421906
GS0155	OPEL	Astra Classic		03/98→	8	19	508	195	550	R22	R22	9034R2877

MAGNETI MARELLI

					L max							O.E.
					Ø1 [mm]	Ø2 [mm]	L max	S [mm]	F [N]	A1	A2	
GS0155	OPEL	Astra F		03/98→	8	19	508	195	550	R22	R22	9034R2877
GS0155	VAUXHALL	Astra Caravan Mk III	without tailgate loudspeakers	09/91→01/98	8	19	509	195	550	R22	R22	9034R2877
GS0156	HYUNDAI	Accent (X-3)		10/94→01/00	10	22	539	200	450	R22	R22	8177022200, 8178022200
GS0157	RENAULT	Megane Grandtour (KA0)		03/99→09/03	8	19	465	178	425	R22	R22	7700418621
GS0158	LANCIA	Y11 (840A)		04/95→	8	19	485	190	320	R25	R25	7792951
GS0159	PEUGEOT	307		08/00→	8	19	457,5	176	430	R25	R25	792515
GS0160	FORD	Escort V		08/90→05/92	8	19	534	216	410	R22	R22	91ABW406A10A1C, 91ABW406A10AF, 91ABW406A10AG, 6656800, 6885988
GS0160	FORD	Escort VI, VII		05/92→09/00	8	19	534	216	410	R22	R22	91ABW406A10A1C, 91ABW406A10AF, 91ABW406A10AG, 6656800, 6885988
GS0161	CITROËN	Xsara Picasso (N68)		12/99→	8	19	670,5	275	390	R25	R25	8731F1
GS0162	BMW	3 (E46)		05/98→	8	19	350	100	300	R25	R25	51244212802, 51248220075, 51248254281
GS0163	FIAT	Punto (188)	3	09/99→	8	19	472	180	330	R22	R22	46744596
GS0164	FIAT	Punto (188)	5	09/99→	8	19	454	164	380	R22	R22	46524678
GS0165	OPEL	Astra G	3 5 without ver. OPC, ECO, SPORT, SRI	01/98→03/04	8	19	537	205	430	R22	R22	90521517
GS0165	VAUXHALL	Astra Mk IV	3 5 without ver. OPC, ECO, SPORT, SRI	01/98→03/04	8	19	537	205	430	R22	R22	90521517
GS0166	OPEL	Astra G	3 for ver. OPC, ECO, SPORT, SRI	01/98→03/04	8	19	534,5	215	480	R22	R22	24411022
GS0166	VAUXHALL	Astra Mk IV	3 for ver. OPC, ECO, SPORT, SRI	01/98→03/04	8	19	534,5	215	480	R22	R22	24411022
GS0167	FORD	Focus (DNW)		11/98→01/01	8	19	511	200	550	R22	R22	1071669, 1079800, 1093705, XS41N406A10AD, XS41N406A10AE
GS0167	TOYOTA	Corolla Verso		01/02→	8	19	511	200	550	R22	R22	689500W101, 689600W091
GS0168	FORD	Focus (DNW)		01/01→	8	19	526	200	450	R22	R22	1R286483, 1146649, XS41N406A10AH, XS41N406A10AJ
GS0169	BMW	3 (E36)		12/90→04/99	8	19	294	80	480	R22	R22	51241960862, 51248151579
GS0170	FORD	Escort V		08/90→05/92	8	19	557	224	360	R22	R22	91ABA406A10A1D, 91ABA406A10A1E
GS0171	FORD	Escort V		08/90→05/92	8	19	557	224	425	R22	R22	91ABA406A10C1
GS0172	FORD	Escort XR3i		08/90→05/92	8	19	555	228	485	R22	R22	91ABW406A10C1C, 6723080
GS0173	SKODA	Fabia (6Y2)	5	11/99→	8	19	441,5	169	600	R22	R22	6Y0827550A
GS0173	SKODA	Fabia (6Y5)		11/00→	8	19	441,5	169	600	R22	R22	6Y0827550A
GS0174	FORD	Mondeo II		08/96→11/00	8	19	552	200	560	R25	R22	93BBA406A10BD
GS0175	VW	Polo (86C)		05/86→07/90	8	19	515	210	550	R22	R22	867827550C
GS0176	VW	Polo (86C)		07/90→09/94	8	19	507	207	550	R22	R22	867827550D
GS0177	OPEL	Vectra B	from Vet. X1000001-	10/95→04/02	6	15	305,5	121	45	R25	R25	90463253, 176387
GS0177	VAUXHALL	Vectra Mk I	from Vet. X1000001-	10/95→04/02	6	15	305,5	121	45	R25	R25	90463253, 176387

MAGNETI MARELLI					L max A1 A2 Ø1 Ø2 S	Ø1 [mm]	Ø2 [mm]	L max	S [mm]	F [N]	A1	A2	O.E.
GS0178	PEUGEOT	406 (R24)		10/95→12/98	8	19	490	190	250	R22	R22	8731A7, 9612504980, 9601430480
GS0179	SEAT	Leon (1M1)		11/99→	8	19	500	200	450	R25	R22	1M6827550A
GS0180	RENAULT	Megane Classic (LA0)		09/96→09/03	8	19	300	100	410	R25	R25	7700838612
GS0181	PEUGEOT	406 (R24)		04/99→05/04	8	19	444	172	250	R22	R22	8731E9, 9636450380
GS0182	VOLVO	V 40		07/95→	8	19	602,5	223	320	R22	R22	30803472
GS0183	VW	Passat IV Variant (3B5)		06/97→11/00	8	19	499	205	470	R25	R22	3B9827550
GS0184	VW	Golf V (1K1)		10/03→	10	22	450	168	535	R25	R22	1K6827550D
GS0185	MERCEDES	A (W168)		07/97→	8	19	539	210	370	R22	R22	1689800164, 1689800964
GS0186	MERCEDES	A (W168)		02/01→	8	19	541	214	370	R22	R22	1689801164
GS0187	MERCEDES	A (W168)		07/97→	8	19	541	214	400	R22	R22	1689801264
GS0188	RENAULT	Laguna II (B74)	5	03/01→	8	19	513	207	535	R25	R25	8200000902
GS0189	RENAULT	Laguna II (B74)	5	03/01→	8	19	513	207	585	R25	R25	8200003020
GS0190	VW	Golf III Variant (1H5)		07/93→04/99	8	19	585	235	360	R22	R22	1H9827550A
GS0191	HONDA	Concerto		10/90→03/95	8	19	679	270	360	R22	R22	74820SK3E20, GTS120, BHE38025
GS0191	ROVER	200 (XH, XW) without GTI version		03/85→10/95	8	19	679	270	360	R22	R22	GSA925, GTS120, BHE38025
GS0192	SEAT	Toledo II (1M2)		04/99→	8	19	278	90	530	R22	R22	1M5827550B
GS0193	VW	Polo (9N)		10/01→	8	19	500	200	380	R25	R22	6Q6827550
GS0194	VW	Lupo (6X, 6E) without GTI, FSI, TDI	up to Vet. 6X1049577	04/98→11/00	8	19	500	200	280	R25	R22	6X0823359A, 6E0827550C
GS0195	VW	Polo (9N)		10/01→	8	19	500	200	400	R25	R22	6Q6827550, 6Q6827550A
GS0196	AUDI	A3 (8L)		09/96→08/00	8	19	500	205	420	R25	R22	8D9827552
GS0196	AUDI	A4 Avant (8D5,B5)		11/95→09/01	8	19	500	205	420	R25	R22	8D9827552
GS0197	AUDI	A3 (8L)		08/00→05/03	8	19	500,5	193	470	R25	R22	8D9827552F
GS0198	VW	Lupo (6X, 6E) FSI, TDI	from Vet. 6E1010000	11/00→	8	19	499	200	365	R25	R22	6E0827550B
GS0198	VW	Lupo (6X, 6E) GTI		04/98→	8	19	499	200	365	R25	R22	6E0827550B
GS0199	FORD	Escort XR3 RS Turbo		02/86→89	8	19	576,5	226	415	R22	R22	86ABB406A10HA
GS0024	IŻ	2126		→93	8	19	450	175	340	R21	R21	21086308010
GS0024	IŻ	2717		→	8	19	450	175	340	R21	R21	21086308010
GS0024	PAZ (ПА3)	3205			8	19	450	175	340	R21	R21	21086308010
GS0200	FORD	Escort XR3 RS Turbo		01/89→07/90	8	19	576,5	226	400	R22	R22	89ABB406A10HA
GS0201	PEUGEOT	309 II		07/89→07/93	8	19	567	230	380/440	R22	R22	873178, 9603762280
GS0202	CITROËN	Xantia (X1)		07/93→01/98	8	19	599	215	550	R22	R22	8731C2
GS0203	CITROËN	Xantia (X1)		07/93→01/98	8	19	599	215	600	R22	R22	949901, 8731C3
GS0204	FORD	Fiesta V	3	11/01→	8	19	624	253	575	R22	R22	1218538, 1251915, 2S51B406A10AB, 2S51B406A10AC
GS0205	FORD	Fiesta V	5	11/01→11/02	8	19	600,5	180	425	R22	R22	1141159, 2S61B406A10AB
GS0206	FORD	Fiesta V	5	11/02→	8	19	599	190	440	R22	R22	1224731, 2S61B406A10AC
GS0207	ROVER	100 (XP)		11/89→12/98	8	19	552	205	370	R22	R22	GSA922, BHE39005
GS0207	ROVER	Metro (XF)		89→93	8	19	552	205	370	R22	R22	GSA922, BHE39005

MAGNETI MARELLI

MAGNETI MARELLI					L max A1 A2 Ø1 Ø2							O.E.
					Ø1 [mm]	Ø2 [mm]	L max	S [mm]	F [N]	A1	A2	
GS0208	ROVER	100 (XP)		11/89→12/98	8	19	552	200	410	R22	R22	GSA923, BHE39006
GS0208	ROVER	Metro (XF)		89→93	8	19	552	200	410	R22	R22	GSA923, BHE39006
GS0209	OPEL	Omega B		02/94→07/03	8	19	440,5	158	370	R22	R22	90379054, 176605
GS0209	VAUXHALL	Omega		02/94→07/03	8	19	440,5	158	370	R22	R22	90379054, 176605
GS0210	SEAT	Ibiza III (6K1)		08/99→02/02	8	19	527	210	350	R22	R22	6K6827550A
GS0211	RENAULT	Megane II (BM0)(CM0)		11/02→	8	19	417	155	500	R22	R22	8200051750
GS0211	RENAULT	Megane II Coupe		11/02→	8	19	417	155	500	R22	R22	8200051750
GS0212	BMW	3 (E46)		05/98→	8	19	541	200	450	R25	R25	51248232873
GS0214	ALFA ROMEO	156 (932)		09/97→	8	19	264	82	370	R25	R25	60651067
GS0215	ALFA ROMEO	156 (932)		09/97→	8	19	264	82	460	R25	R25	60657685
GS0216	SKODA	Octavia (1U2)		09/96→09/00	8	19	492	196	470	R22	R22	1U6827550, 1U6827550A, 1U6827550B, 1U6827550C
GS0217	SKODA	Octavia (1U2)		09/00→	8	19	496,5	198	500	R22	R22	1U6827550E
GS0218	SKODA	Octavia (1U2)		09/00→	8	19	495	182	515	R22	R22	1U6827550F
GS0219	SKODA	Octavia RS (1U2)	ver. Rally Sport	09/00→	8	19	494	182	550	R22	R22	1U6827550G
GS0220	SKODA	Octavia RS (1U2)	ver. Rally Sport	09/00→	8	19	494	182	565	R22	R22	1U6827550H
GS0221	ALFA ROMEO	147 (937)		01/01→	8	19	440	171	370	R25	R22	46771551
GS0222	AUDI	A4 (8E2,B6)		11/00→	10	22	298	95	650	R22	R22	R105827552F, R105827552G
GS0222	AUDI	A6 (R10)	from Vet. R10-1-000001	05/00→05/04	10	22	298	95	650	R22	R22	R105827552F
GS0223	FORD	Focus (DAW, DBW)		10/98→02	10	22	465	140	655	R22	R22	1070024, 1074368, 1150277, 1150279, XS41A406A10AE, XS41A406A10AF
GS0224	SEAT	Ibiza IV (6L1)		02/02→	8	19	500	200	470	R25	R22	6L6827550B
GS0225	VW	Vento (1H2)		11/91→09/98	10	22	260	80	690	R22	R25	1H5827550A, 1H5827550B
GS0226	AUDI	A4 Avant (8E5,B6)		09/01→	8	19	500	200	530	R25	R25	8D9827552E
GS0227	RENAULT	Espace III (JE)	without window that can be opened	11/96→10/02	10	22	560	210	730	R22	R22	6025300735
GS0228	RENAULT	Espace III (JE)	with window that can be opened	11/96→10/02	10	22	560	210	800	R22	R22	6025305941
GS0228	RENAULT	Grand Espace III (JE)	with window that can be opened	10	22	560	210	800	R22	R22		6025305941
GS0229	RENAULT	Espace III (JE)		11/96→10/02	6	15	447	170	R280	R25	R25	6025306563
GS0229	RENAULT	Grand Espace III (JE)		11/96→10/02	6	15	447	170	R280	R25	R25	6025306563
GS0230	FORD	Mondeo III		11/00→	8	19	534,5	198	485	R22	R22	1117046, 1S71A406AD10AC
GS0231	FORD	Mondeo III	with manual wiper	11/00→	8	19	534,5	198	520	R22	R22	1119688, 1S71A406A10AB
GS0232	FORD	Mondeo III	with automatic wiper	11/00→	8	19	534,5	198	585	R22	R22	1219986, 1S71A406A10CD
GS0233	AUDI	A6 (R10,C5)	up to Vet. R10-Y-120000	08/97→04/00	10	22	278	90	630	R22	R22	R10582755R2 R105827552C R105827552D
GS0234	BMW	3 (E36)		09/94→08/00	8	19	596	190	380	R22	R22	51248206652
GS0235	BMW	3 (E36)		03/94→08/00	8	19	596	195	430	R22	R22	5124249R2849
GS0236	BMW	3 (E36)		03/94→08/00	8	19	596,5	190	420	R22	R22	51248230070
GS0237	AUDI	A6 Avant (R10,C5)	up to Vet. R10-Y-120000	08/97→04/00	10	22	500	190	635	R25	R22	R10982755R2
GS0238	AUDI	A6 Avant (4B, C5)		12/97→01/05	10	22	500	195	690	R22	R22	4B9827552L, 4B9827552M

MAGNETI MARELLI					L max A1 A2 Ø1 Ø2 S							O.E.
					Ø1 [mm]	Ø2 [mm]	L max	S [mm]	F [N]	A1	A2	
GS0238	AUDI	A6 Avant (R10)	with heated window up to Vet. R10-Y-120001	04/00→	10	22	500	200	690	R22	R22	R109827552E
GS0238	AUDI	A6 Avant (R10, C5)		12/97→01/05	10	22	500	195	690	R22	R22	R109827552L, R109827552M
GS0238	AUDI	A6 Avant (R10, C5)		04/00→	10	22	500	195	690	R22	R22	R109827552L, R109827552M
GS0238	AUDI	A6 Avant (R10,C5)	with heated window up to Vet. R10-Y-120000	08/97→04/00/00	10	22	500	195	690	R22	R22	R109827552C, R109827552M
GS0239	AUDI	A6 Avant (R10)	up to Vet. R10-Y-120001	04/00→	10	22	500	200	635	R22	R22	R109827552G
GS0240	RENAULT	Clio II		08/98→	8	19	412	155	340	R22	R22	7700842256
GS0241	OPEL	Corsa B	3	03/93→09/00	8	19	544	206	320	R22	R22	90481269
GS0241	VAUXHALL	Corsa Mk I	3	03/93→09/00	8	19	544	206	320	R22	R22	90481269
GS0242	OPEL	Kadett E		09/84→08/91	8	19	550	232	320	R22	R22	90191920
GS0242	VAUXHALL	Astra Mk II		09/84→08/91	8	19	550	232	320	R22	R22	90191920
GS0243	OPEL	Kadett E		09/84→08/91	8	19	550	232	410	R22	R22	90191627
GS0243	VAUXHALL	Astra Mk II		09/84→08/91	8	19	550	232	410	R22	R22	90191627
GS0244	VW	Transporter T4	up to Vet.. 70N151781	01/90→07/92	10	22	569	225	660	R22	R22	701829331F
GS0245	VW	Transporter T4	up to Vet. 70N151781	01/90→07/92	10	22	569	225	750	R22	R22	701829331G
GS0246	VW	Transporter T4	(ver. "Trim") up to Vet. 70N151781	01/90→07/92	10	22	567	225	910	R22	R22	701829331J
GS0247	VW	Transporter T4	ver. hydro lift from Vet. 70N151781	07/92→	10	22	567	225	460	R22	R22	701829331T
GS0248	VW	Transporter T4	from Vet. 70N151781	07/92→	10	28	686	255	770	R22	R22	701829331R
GS0249	VW	Transporter T4	and heated window from Vet. 70N151781	07/92→	10	28	686	255	910	R22	R22	701829331AB
GS0250	VW	Transporter T4	(ver. "Trim") from Vet. 70N151781	07/92→	10	28	686	255	830	R22	R22	701829331S
GS0251	FORD	Escort VI, VII		05/92→09/00	8	19	544	210	440	R22	R22	93ABA406A10B1B
GS0252	FORD	Sierra L, GL, GHIA		08/82→02/93	8	19	496,5	192	565	R22	R22	83BBA406A10BD
GS0253	RENAULT	Clio I Baccara, Elle, Wiliams		01/91→08/98	8	19	476,5	184	420	R22	R22	7700810554
GS0254	CITROËN	ZX (N2)		09/91→06/97	8	19	600	250	260/320	R22	R22	9612361280
GS0255	RENAULT	R 19 I (B/C53), R 19 II (B/C53)		11/88→12/95	8	19	505	200	520	R22	R22	7700786248, 7700799027
GS0256	OPEL	Vectra B	from Vet. X1000001-	98→04/02	8	19	470	182	600	R22	R22	9152393
GS0256	VAUXHALL	Vectra Mk I	from Vet. X1000001-	98→04/02	8	19	470	182	600	R22	R22	9152393
GS0257	OPEL	Vectra A		91→09/95	8	19	473	184	570	R22	R22	90227934
GS0257	VAUXHALL	Cavalier Mk III		91→09/95	8	19	473	184	570	R22	R22	90227934
GS0258	SEAT	Cordoba II (6K2)		06/99→12/02	8	19	287	99	365	R22	R22	6K5827550C
GS0259	BMW	3 (E36)		12/90→04/99	8	19	293	80	610	R22	R22	51242264448
GS0260	AUDI	A3 (8L)		09/96→05/03	8	19	500	200	350	R25	R22	8L0823359
GS0260	VW	Bora (1J)		10/98→	8	19	500	200	350	R25	R22	1J0823359, 8L0823359
GS0260	VW	Golf III Cabrio (1E7)	from Vet. 1E1K010829	01/98→01/01	8	19	500	200	350	R25	R22	8L0823359
GS0260	VW	Golf IV (1J)		08/97→98	8	19	500	200	350	R25	R22	8J0823359, 8J0823359A, 8L0823359
GS0260	VW	Lupo (6X, 6E) without GTI, FSI, TDI	up to Vet. 6X1049577	04/98→11/00	8	19	500	200	350	R25	R22	6X0827550, 6X0827550A, 8L0823359
GS0261	CITROËN	Xsara (N1), Xsara Break (N2), Xsara Coupe (N0), Xsara Picasso (N68)		09/00→	8	19	595	250	450	R22	R22	7925R28, 9637509380
GS0262	BMW	3 (E46)	engine hood - all body types	05/98→	8	19	316	110	580	R25	R25	51238202688

MAGNETI MARELLI

MAGNETI MARELLI					L max A1 s A2 Ø1 Ø2							O.E.
					Ø1 [mm]	Ø2 [mm]	L max	S [mm]	F [N]	A1	A2	
GS0263	VW	Golf III Cabrio (1E7)	from Vet. 1E1K010830	01/01→02/02	8	19	500	200	350	R25	R22	8J0823359C
GS0263	VW	Golf IV (1J)		37167	8	19	500	200	350	R25	R22	8J0823359C
GS0264	VW	Polo (6N2)		10/99→09/01	8	19	585	235	250	R22	R22	6N0823359
GS0265	AUDI	A6 (R10,C5), A6 Avant (R10,C5)		08/97→05/04	8	19	722	306	280	R22	R22	3B0823239A, 3B0823359, 3B0823359B
GS0265	VW	Passat IV (3B2)(3B5)		08/96→11/00	8	19	722	306	280	R22	R22	3B0823359, 3B0823359B
GS0265	VW	Passat V (3B3)(3B6)		09/00→	8	19	722	306	280	R22	R22	3B0823359B
GS0266	PEUGEOT	306 (A/B/C/E/D)		03/93→04/01	8	19	650	265	190	R25	R25	792509, 9629219580
GS0267	PEUGEOT	106 II		05/96→	8	19	685	285	150/180	R22	R22	792506
GS0268	AUDI	A3 (8P1)		05/03→	8	19	715	306	290	R22	R22	8P0823359
GS0268	AUDI	A4 Cabrio (8H7)		04/02→	8	19	715	306	290	R22	R22	8H0823359
GS0269	CITROËN	Xsara (N1), Xsara Break (N2), Xsara Picasso (N68)		04/97→09/00	8	19	458	160	300	R22	R22	792511, 9629618980
GS0270	ALFA ROMEO	146 (930)		01/94→01/01	8	19	522	210	300	R22	R22	60604823
GS0271	ALFA ROMEO	146 (930)	with engine 2.0 16V, type "Junior"	02/95→01/01	8	19	522	210	400	R22	R22	60612565
GS0272	ALFA ROMEO	164 (164)		09/91→06/97	8	19	278	90	480	R22	R22	60591762
GS0273	ALFA ROMEO	164 (164)		01/87→08/91	8	19	278	90	430	R22	R22	60566147
GS0274	AUDI	A8 (4D)		03/94→10/02	8	19	403,5	160	310	R22	R22	4D0823551B, 4D0827551A, 4D0827551B
GS0275	AUDI	A8 (4D)		03/94→10/02	8	19	529	215	245	R22	R22	4D0823359F
GS0276	AUDI	TT Coupe (8N)		06/98→	8	19	405	150	520	R22	R22	8N8827552
GS0277	MITSUBISHI	Carisma (DA)		07/95→	8	19	569	240	490	R21	R21	MR101555
GS0278	RENAULT	Laguna I (B56)	5	03/94→03/01	8	19	595	210	470	R22	R25	7700842152, 7700823271, 7700829764, 7700842153
GS0279	FIAT	Stilo (192)	3	10/01→	8	19	441,5	169	460	R21	R21	46784994
GS0280	FIAT	Stilo (192)	5	10/01→	8	19	506	200	380	R21	R21	46784995
GS0281	FIAT	Tempra Station Wagon (159)		01/90→08/97	8	19	630	269	330	R21	R21	76063040
GS0282	FIAT	Ulysse (220)		06/94→11/95	8	19	628	230	570	R21	R21	9626493880, 9622553680
GS0283	SEAT	Arosa (6H)		01/97→	8	19	500	200	320	R25	R22	6X0827550, 6X0827550A, 8L0823359
GS0284	FORD	Escort III, IV		07/80→07/90	8	19	595	248	370	R21	R21	1650686, 81ABD406A10BB
GS0285	FORD	Escort III, IV		07/80→07/90	8	19	592	239	400	R21	R21	86ABW406A10CA, 81ABD406A10BA
GS0286	VW	Lupo (6X, 6E) GTI, FSI, TDI		04/98→	8	19	500	200	190	R25	R22	6X0823359B
GS0287	FORD	Focus C-MAX		10/03→	8	19	570	230	460	R21	R21	1252377, 1252806, 3M51R406A10AB
GS0288	FORD	Fiesta V		06/02→	8	19	557	205	500	R21	R21	1211497, 1212586, 2N11N406A10AD
GS0288	FORD	Fusion		08/02→	8	19	557	205	500	R21	R21	1212586, 2N11N406A10AD
GS0289	FORD	Mondeo I		02/93→08/96	8	19	256	85	500	R21	R21	93BBF406A10AB

					Ø1 [mm]	Ø2 [mm]	L max	S [mm]	F [N]	A1	A2	O.E.
GS0289	FORD	Mondeo II		08/96→11/00	8	19	256	85	500	R21	R21	93BBF406A10AB
GS0290	FORD	Scorpio I		01/85→09/94	8	19	501	175	595	R21	R21	85GBA406A10BD
GS0291	FORD	Scorpio II		10/94→08/98	8	19	550	220	285	R21	R21	7245797, 95GB16C826AB
GS0292	FORD	Sierra Turner	without laudspeakers	08/82→02/93	8	19	485	196	460	R21	R21	83BBN406A10AD
GS0293	FORD	Sierra Turner	with laudspeakers	08/82→02/93	8	19	485	196	520	R21	R21	83BBN406A10BB
GS0294	FORD	Transit		03/00→	8	19	678	282	480	R21	R21	4378216, 2T14V406A10AB
GS0295	HYUNDAI	Elantra (J2) Wagon		02/96→	8	19	521	197	435	R21	R21	8177129221
GS0296	HYUNDAI	Santa Fe (SM)		02/01→	8	19	436	160	100	R21	R21	8717126010
GS0297	LADA	2104	(without ball stud)	84→05	8	19	450	175	260	R21	R21	21216308010
GS0297	LADA	2107	(without ball stud)	82→05	8	19	450	175	260	R21	R21	21216308010
GS0297	LADA	2110	(without ball stud)	→96	8	19	450	175	260	R21	R21	21216308010
GS0297	LADA	2111	(without ball stud)	→97	8	19	450	175	260	R21	R21	21216308010
GS0297	LADA	2112	(without ball stud)	→99	8	19	450	175	260	R21	R21	21216308010
GS0298	LADA	Nadieżda 2120		→99	8	19	602	252	430	R21	R21	21118231015
GS0299	LANCIA	Dedra SW (835)		10/94→07/99	8	19	526	202	390	R21	R21	46725028
GS0213	HONDA	Civic V (MB)	5	01/97→02/01	8	19	517	200	460	R25	R25	74820ST3E51, 74820ST3E52, 74820ST3E01, 74820ST3E02
GS0300	LANCIA	Lybra (839AX)		07/99→	8	19	294	100	380	R21	R21	46428438
GS0301	LANCIA	Lybra (839BX)		07/99→	8	19	385	R288	560	R21	R21	46453835
GS0302	LANCIA	Z (Zeta) (220)		06/94→11/95	8	19	628	230	570	R21	R21	9618278480, 1479303080
GS0303	FIAT	Ulysse (220)		11/95→08/02	8	19	609	200	560	R21	R21	9630698380
GS0303	LANCIA	Z (Zeta) (220)		11/95→08/02	8	19	609	200	560	R21	R21	9630698380
GS0304	LAND ROVER	Range Rover Classic C		07/70→86	8	19	498	196	225	R21	R21	MXC7833
GS0305	MERCEDES	C (S202)		03/96→03/01	8	19	484	189	450	R21	R21	2029800364
GS0306	MERCEDES	CLK (A208) (C208)		06/97	8	21	450	170	490	R21	R21	2088800029
GS0307	MERCEDES	E (W211) (S211)		03/02→	8	19	675	285	260	R21	R21	2118800029
GS0308	RENAULT	R 19 I Chamade (L53)		04/89→04/92	8	19	310	89	590	R21	R21	7700811570
GS0309	PEUGEOT	505 Break		07/83→09/92	8	19	640	190	470	R21	R21	873151
GS0310	VOLVO	740 (745)		08/85→08/92	8	19	546	230	300	R22	R22	6846014
GS0310	VOLVO	760 (765)		01/82→07/92	8	19	546	230	300	R22	R22	6846014
GS0310	VOLVO	940 (945), 960 (965)		08/90→10/98	8	19	546	230	300	R22	R22	6846014
GS0310	VOLVO	V 90		08/90→10/98	8	19	546	230	300	R22	R22	6846014, 1355263
GS0311	RENAULT	Espace II (J63)		04/91→11/93	8	19	525	206	560	R21	R21	6025101952
GS0312	RENAULT	Espace II (J63)		11/93→11/96	8	19	546	220	490/530	R21	R21	6025106762
GS0314	PEUGEOT	605		01/94→12/98	8	19	408	150	310	R21	R21	8731A1, 9622165080
GS0315	NISSAN	Primera (P10) EC4		06/90→06/96	8	19	591	215	410	R21	R21	904523F201
GS0316	NISSAN	Primera (P10) EC4		06/90→06/96	8	19	590	215	450	R21	R21	904523F200
GS0317	PEUGEOT	406 Break (8E/F)		10/96→	8	19	559	200	550	R21	R21	8731C5, 9626771680
GS0318	RENAULT	Espace I (J11)		01/88→03/91	8	19	601	225	450	R21	R21	6025006621, 6025005935
GS0319	NISSAN	Primera (P11) EQ4		06/96→03/02	8	19	314	100	420	R21	R21	844302F010, 844309F500
GS0320	NISSAN	Primera (P11) EQ4		06/96→03/02	8	19	314	100	465	R21	R21	844302F000

MAGNETI MARELLI

MAGNETI MARELLI					L max A1 A2 Ø1 Ø2							O.E.
					Ø1 [mm]	Ø2 [mm]	L max	S [mm]	F [N]	A1	A2	
GS0321	PEUGEOT	306 (R22)		06/94→04/01	8	19	284	95	290	R21	R21	8731A2, 9617046480
GS0322	NISSAN	Primera (P10) EC4	with additional STOP light	06/90→06/96	8	19	590	220	480	R21	R21	904523F202, 9045298J26
GS0323	VW	New Beetle (9C)		01/98→	8	19	599	244	330	R22	R22	1C0827550A, 1C0827550B, 1C0827550C, 1C0827550D
GS0324	PEUGEOT	309 II 19 GTI		07/89→07/93	8	19	567	230	450	R21	R21	873179, 9603762380
GS0325	RENAULT	Safrane I		04/92→07/96	8	19	539,5	220	250	R21	R21	7700812193
GS0325	RENAULT	Safrane I		04/92→07/96	8	19	540	220	220/250	R22	R22	7700812193
GS0325	RENAULT	Safrane II		08/96→12/00	8	19	539,5	220	250	R21	R21	7700812193
GS0325	RENAULT	Safrane II		08/96→12/00	8	19	540	220	220/250	R22	R22	7700812193
GS0326	MERCEDES	V (W638)		02/96→	10	22	775	322	530	R21	R21	6389800464
GS0326	MERCEDES	Vito (638)		02/96→	10	22	775	322	530	R21	R21	6389800464
GS0327	MERCEDES	V (W638)		02/96→	10	22	772	322	630	R21	R21	6389800364
GS0327	MERCEDES	Vito (638)		02/96→	10	27	772	322	630	R21	R21	6389800364
GS0328	FORD	Mondeo III		11/00→	10	22	250	74	660	R21	R21	1117690, 1120812, 1S7116C826AD
GS0329	RENAULT	Twingo I, Twingo II		03/93→	10	22	450	162	740	R22	R22	7700815R285
GS0330	FORD	Mondeo I		02/93→08/96	10	22	485	165	640	R22	R22	93BBN406A10AC
GS0330	FORD	Mondeo II		08/96→11/00	10	22	485	165	640	R22	R22	93BBN406A10AC
GS0331	AUDI	80, 80 Quatro (8C,B4), 80 Avant, 80 Avant Quatro (8C,B4)		08/91→10/94	8	19	668	280	375	R2	R9	R230823360A
GS0331	AUDI	Cabriolet (89)		06/91→	8	19	668	280	375	R2	R9	R230823360A
GS0332	SSANGYONG	Rexton	with window that can be opened	04/02→	8	19	549,5	200	620	R22	R22	7140608100, 7140608110, 7141608100, 7141608110
GS0333	RENAULT	R Super 5 Baccara		01/85→06/91	8	19	691,5	285	270	R21	R21	7700787749
GS0334	ROVER	800 (XS)	up to Vet. 230966	10/86→10/92	8	19	569	215	530	R21	R21	BHM410040
GS0335	VW	Lupo (6X, 6E) without GTI, FSI, TDI	from Vat. 6X1049578	11/00→	8	19	479	180	300	R25	R22	6X0823359C
GS0336	PEUGEOT	206 SW	tailgate's window	07/02→	8	19	525	210	140	R21	R21	8731G4, 9642210080
GS0337	OPEL	Vectra C		04/02→	8	19	264	80	520	R21	R21	9177081, 176607
GS0337	VAUXHALL	Vectra Mk II		04/02→	8	19	264	80	520	R21	R21	9177081, 176607
GS0338	SEAT	Leon (1M1)		11/99→	8	19	574	235	330	R21	R21	1M0823359A
GS0338	SEAT	Toledo II (1M2)		04/99→	8	19	574	235	330	R21	R21	1M0823359A
GS0339	PEUGEOT	206 CC		09/00→	8	19	448	180	590	R21	R21	8731F2, 9637115080
GS0340	CITROËN	C8		07/02→	8	19	631	230	510	R21	R21	8731G6
GS0340	PEUGEOT	807		06/02→	8	19	631	230	510	R21	R21	8731G6
GS0341	OPEL	Signum		05/03→	8	19	649,5	270	310	R21	R21	24454473, 1178224
GS0341	OPEL	Vectra C		04/02→	8	19	649,5	270	310	R22	R21	24454473, 1178224
GS0341	VAUXHALL	Signum		05/03→	8	19	649,5	270	310	R21	R21	24454473, 1178224
GS0341	VAUXHALL	Vectra Mk II, Vectra Caravan Mk II		04/02→	8	19	649,5	270	310	R22	R21	24454473, 1178224
GS0342	OPEL	Vectra C	closed manually	04/02→	8	19	571	208	570	R22	R22	13101335, 132691
GS0342	VAUXHALL	Vectra Mk II	manually closed	04/02→	8	19	649,5	270	310	R21	R21	R2810R2835, R282691

MAGNETI MARELLI					L max A1 S A2 Ø1 Ø2							O.E.
					Ø1 [mm]	Ø2 [mm]	L max	S [mm]	F [N]	A1	A2	
GS0343	VOLVO	940 (944), 960 (964)		08/90→10/98	8	19	525	205	310	R22	R22	3526575
GS0344	VOLVO	940 (944), 960 (964)		08/90→10/98	8	19	525	205	350	R22	R22	3529925
GS0344	VOLVO	S 90		01/97→05/98	8	19	525	205	310	R22	R22	3526575
GS0344	VOLVO	S 90		01/97→05/98	8	19	525	205	350	R22	R22	3529925
GS0345	SAAB	9-3 (YS3D)	with one gas spring	02/98→09/02	8	19	524	210	480	R21	R21	5183017
GS0346	SAAB	900 II (YS3D)		10/93→03/98	8	19	524	210	240	R21	R21	4323994
GS0347	RENAULT	Avantime		09/01→	8	19	357	128	555	R21	R21	6025401711
GS0348	NISSAN	Primera (P12)		03/02→	8	19	268	78	510	R21	R21	84430AV600
GS0349	MITSUBISHI	Space Star (DG0)		06/98→	8	19	555	220	450	R21	R21	MR248939, MR248940
GS0350	MITSUBISHI	Carisma (DA)		07/95→	8	19	570	230	490	R21	R21	MB927791
GS0350	MITSUBISHI	Carisma (DA)		07/95→	8	19	570	230	490	R22	R22	MB927791
GS0351	SSANGYONG	Rexton		04/02→	8	19	310	95	430	R21	R21	7115008100
GS0351	SSANGYONG	Rexton		04/02→	8	19	310	95	430	R22	R22	7115008100
GS0352	SSANGYONG	Rexton		04/02→	8	19	353	110	150	R22	R22	7143608100
GS0353	VW	Touareg (7LA)		10/02→	8	19	538	190	125	R22	R22	7L6823359B
GS0354	PEUGEOT	607		02/00→	8	19	499	171	350/400	R21	R21	8731F9, 8731G9
GS0355	ROVER	800 (XS)		01/92→02/99	8	19	5R28	215	350	R21	R21	BKK41003
GS0356	NISSAN	Micra (K12)		01/03→	8	19	500	190	360	R21	R21	90450AX000, 90450AX610, 90451AX000
GS0357	VOLVO	XC 90		10/02→	8	19	509	200	320	R22	R22	30649736
GS0358	ROVER	Maestro		84→93	8	19	507	208	436	R21	R21	BEP6628
GS0359	CITROËN	Evasion	up to Vat. 07632	10/97→08/02	8	19	632	215	600	R21	R21	873100000
GS0359	PEUGEOT	806	up to Vat. 07632	10/97→08/02	8	19	632	215	600	R21	R21	873100000
GS0360	PEUGEOT	305 Break I, 305 Break II		08/80→12/88	8	19	636	248	360	R21	R21	873148, 873149, 7920071833
GS0361	OPEL	Omega A	from Vet. N1145949	01/91→02/94	8	19	364	R285	180	R21	R21	90275102, 176603
GS0361	OPEL	Senator B	from Vet. N1145949	01/91→09/93	8	19	364	R285	180	R21	R21	90275102, 176603
GS0361	VAUXHALL	Carlton Mk III	from Vet. N1145949	01/91→03/94	8	19	364	R285	180	R21	R21	90275102, 176603
GS0361	VAUXHALL	Senator	from Vet. N1145949	01/91→09/93	8	19	364	R285	180	R21	R21	90275102, 176603
GS0362	OPEL	Omega A	up to Vet. -N1145948	01/86→01/91	8	19	364	R285	240	R21	R21	90275080, 176602, 90275073, 176601
GS0362	OPEL	Senator B	up to Vet. -N1145948	09/87→01/91	8	19	364	R285	240	R21	R21	90275080, 176602
GS0362	VAUXHALL	Carlton Mk III	up to Vet. -N1145948	09/86→01/91	8	19	364	R285	240	R21	R21	90275080, 176602, 90275073, 176601
GS0362	VAUXHALL	Senator	up to Vet. -N1145948	09/87→01/91	8	19	364	R285	240	R21	R21	90275080, 176602
GS0363	OPEL	Calibra		03/90→08/97	8	19	568	183	430	R21	R21	90346469
GS0363	VAUXHALL	Calibra		06/90→08/97	8	19	568	183	430	R21	R21	90346469
GS0364	OPEL	Tigra	L D534	07/94→12/00	8	19	828	249	355	R21	R21	90481180
GS0364	VAUXHALL	Tigra		07/94→12/00	8	19	828	249	355	R21	R21	90481180
GS0365	AUDI	A2 (8Z)		02/00→	8	19	500	200	420	R22	R22	8Z082755R2, 8Z082755R3
GS0366	HONDA	Civic VI (EU, EP)		02/01→	8	19	501	195	400	R22	R22	74820S6DE02, 74870S6DE02

MAGNETI MARELLI

					L max							O.E.
					Ø1 [mm]	Ø2 [mm]	L max	S [mm]	F [N]	A1	A2	
GS0367	RENAULT	Megane II Grandtour		09/03→	8	19	547	215	500	R22	R22	8200119498, 8200212598
GS0368	FORD	Mondeo III		02→	8	19	548	2R28	475	R22	R22	1232189, 1S71N406A10AC
GS0369	FORD	Mondeo III		11/00→02	8	19	555	225	475	R22	R22	1117394, 1S71N406A10AB
GS0370	SAAB	9-3 (YS3D)		02/98→09/02	8	19	567	230	500	R22	R22	4854733, 4854717
GS0370	SAAB	9-3 (YS3F)		09/02→	8	19	567	230	500	R22	R22	4854733, 4854717
GS0371	AUDI	80, 80 Quatro (8C,B4)		08/91→10/94	8	19	279	90	580	R22	R25	R235827552
GS0372	FIAT	Multipla		04/99→	8	19	506	203	520	R22	R25	46514867
GS0373	HYUNDAI	Coupe (GK)		09/01→	8	19	544	210	490	R22	R25	817712C010, 817712C011
GS0374	HYUNDAI	Coupe (GK)		09/01→	8	19	544	210	530	R22	R25	817712C020, 817712C021
GS0375	HYUNDAI	Elantra (XD)		06/00→	8	19	486	187	610	R22	R25	817712D220
GS0376	HYUNDAI	Santa Fe (SM)		02/01→	8	19	557	215	525	R22	R25	8177126010
GS0377	HYUNDAI	Santa Fe (SM)		02/01→	8	19	440	155	300	R22	R25	8116126000
GS0378	RENAULT	Laguna I Grandtour (K56)	without window that can be opened	03/94→04/98	8	19	473,5	170	590	R22	R25	7700838005
GS0379	ROVER	800 (XS)	from Vat. 230867	10/92→02/99	8	19	606,5	230	540	R22	R25	BHE41003, BHE41004
GS0380	AUDI	100 (A4,C4)		12/90→07/94	8	19	722	306	310	R22	R22	R90823359B, R90823359C, R103823359
GS0380	AUDI	A6 (A4,C4), A6 Avant (A4,C4)		06/94→08/97	8	19	722	306	310	R22	R22	R103823359
GS0381	AUDI	A4 (8E2,B6), A4 Avant (8E5,B6)		11/00→	8	19	722	315	325	R22	R22	8E0823359A
GS0382	FIAT	Stilo Multiwagon	tailgate's window	10/03→	8	19	395	148	180	R22	R22	46812168
GS0383	FORD	Scorpio II		01/92→09/94	8	19	564	215	480	R22	R22	6962811, 1666983, 6186916, 96GBN406A10AF
GS0383	FORD	Scorpio II		10/94→08/98	8	19	564	215	480	R22	R22	6962811, 1666983, 6186916, 96GBN406A10AF
GS0384	OPEL	Ascona C		09/81→10/88	8	19	507,5	194	350	R22	R22	90195260
GS0384	VAUXHALL	Cavalier Mk II		09/81→10/88	8	19	507,5	194	350	R22	R22	90195260
GS0385	CITROËN	C5		03/01→	8	19	512	200	450	R22	R22	8731F6
GS0385	OPEL	Ascona C		09/81→10/88	8	19	510	208	440	R22	R22	90158125
GS0385	VAUXHALL	Cavalier Mk II		09/81→10/88	8	19	510	208	440	R22	R22	90158125
GS0386	ALFA ROMEO	156 (932)		09/97→	8	19	400	149	300	R25	R25	60654724
GS0387	VW	New Beetle (9C)		01/98→	8	19	679	270	270	R22	R22	1C0823359B, 1C0823359C, 1C0823359D
GS0388	ROVER	Streetwise		89→93	8	19	601	226	360	R22	R22	BHE450030
GS0389	OPEL	Ascona C		09/81→10/88	8	19	510	208	390	R22	R22	
GS0389	VAUXHALL	Cavalier Mk II		09/81→10/88	8	19	510	208	390	R22	R22	
GS0390	HONDA	Civic VI (EU, EP)		02/01→	8	19	568	213	360	R22	R22	74820S5SE01, 74870S5SE01
GS0391	SAAB	9-3 (YS3D) Viggen		02/98→09/02	8	19	567	230	560	R22	R22	5022082
GS0392	OPEL	Record B		08/77→08/86	8	18	580	245	340	R21	R21	90043R282
GS0392	OPEL	Record B	L	08/77→08/86	8	18	580	245	340	R22	R22	90043R282
GS0392	VAUXHALL	Carlton Caravan Mk II		08/77→08/86	8	18	580	245	340	R21	R21	90043R282
GS0393	FORD	Puma		03/97→06/02	8	19	570	230	215	R22	R22	1034930, 1088369, V97FBC406A10AB, V97FBC406A10AC

					Ø1 [mm]	Ø2 [mm]	L max	S [mm]	F [N]	A1	A2	O.E.
GS0393	FORD	Puma		06/02→	8	19	570	230	215	R22	R22	1088369, V97FBC406A10AC
GS0394	SAAB	900 II (YS3D)		10/93→03/98	8	19	570	230	420	R22	R22	4326468
GS0395	SAAB	900 II (YS3D)		10/93→03/98	8	19	570	230	520	R22	R22	4324307
GS0396	SAAB	9-3 (YS3D)		02/98→09/02	8	19	570	240	470	R22	R22	4858627
GS0398	FIAT	Doblo		03/01→	8	19	240	74	300	R22	R22	46826216, 46773097
GS0399	HONDA	Civic IV (MA, MB)		10/91→11/95	8	19	516	205	425	R22	R22	74820ST3E02
GS0313	RENAULT	Express/Rapid (F4)		07/85→03/98	8	19	673,5	275	440	R21	R21	7700807057
GS0400	MINI	Mini One / Cooper		06/01→	8	19	497	197	330	R22	R22	41626801258
GS0401	OPEL	Kadett E	from Vat. J2502493-JE100001→	08/87→08/91	8	19	700	257	320	R22	R22	90241996 (90241995 without wiper)
GS0401	VAUXHALL	Astra Caravan Mk II	from Vat. J2502493-JE100001→	08/87→08/91	8	19	700	257	320	R22	R22	90241996 (90241995 without wiper)
GS0402	OPEL	Omega A		01/86→02/94	8	19	511	199	520	R22	R22	90246621 (90246620 without speakers)
GS0402	VAUXHALL	Carlton Caravan Mk III		01/86→02/94	8	19	511	199	520	R22	R22	90246621 (90246620 without speakers)
GS0403	NISSAN	Sunny II Traveler (B12)		06/86→06/91	8	18	765	325	235	R21	R21	9045055A10
GS0404	MG	ZT		06/01→	8	19	314	105	370	R25	R22	BMH500010
GS0404	ROVER	75 (RJ)		02/99→	8	19	314	105	370	R25	R22	BMH500010
GS0405	MG	ZT-T	with window that can be opened	10/01→	8	19	565	210	560	R25	R22	BHE500050
GS0405	ROVER	75 Tourer (RJ)	with window that can be opened	10/01→	8	19	565	210	560	R25	R22	BHE500050
GS0406	NISSAN	Primera Traveler (WP12)		03/02→	8	19	472	175	590	R25	R22	90452AV700
GS0407	FORD	Focus		04/02→11/04	10	22	455	127	700	R22	R22	
GS0408	FORD	Focus		11/04 →	8	19	483	199	530	R22	R22	
GS0409	AUDI	80, 80 Quatro (89,R23)		09/86→09/91	8	19	275	90	420	R25	R25	893827552
GS0410	AUDI	A6 Avant (A4,C4)		06/94→08/97	8	19	647	275	450	R22	R22	R99827552
GS0411	ALFA ROMEO	166 (936)		09/98→	8	19	279	95	390	R25	R25	60622424
GS0412	AUDI	100 (A4, C3)	from Vet. 44-F-115151	04/85→12/90	8	19	465	187	320	R2	R9	443823359B
GS0412	AUDI	200 (44)	from Vet. 44-F-115151	04/85→12/90	8	19	465	187	320	R2	R9	443823359B
GS0414	BMW	3 (E36)		01/92→08/99	6	15	410	160	280	R2	R9	51238119558
GS0415	NISSAN	Primera (P11) EQ5		01/99→03/02	8	19	520	180	670	R25	R25	904529F725
GS0416	OPEL	Vectra B		10/95→04/02	8	19	567	193	540	R22	R25	90463781
GS0417	PEUGEOT	307 SW		03/02→	8	19	594	180	630	R22	R22	8731F8, 9638605280
GS0418	PEUGEOT	405 I Break (15E), 405 II Break (4E)		10/88→10/96	10	22	418	148	700	R22	R22	873183, 9612504980, 9601430480
GS0419	VOLVO	XC 90		10/02→	8	19	471	185	380	R25	R22	30634580
GS0419	VOLVO	XC 90		10/02→	8	19	471	185	380	R25	R22	30634580
GS0420	AUDI	100 Avant (A4, C3)		08/82→12/90	8	19	580	247	470	R25	R25	R95827551
GS0420	AUDI	200 Avant (44)		08/82→12/90	8	19	580	247	470	R25	R25	R95827551
GS0421	FORD	Transit		09/85→07/91	10	22	550	235	810	R22	R22	86VBV406A10BA
GS0422	CITROËN	Xantia Break (X1)		06/95→01/98	8	19	590,5	245	480	R22	R22	8731A8, 620915680, C101860033

MAGNETI MARELLI

MAGNETI MARELLI					L max A1 A2 Ø1 Ø2 Ø1 [mm]	Ø2 [mm]	L max	S [mm]	F [N]	A1	A2	O.E.
GS0422	CITROËN	Xantia Break (X2)		01/98→09/01	8	19	590,5	245	480	R22	R22	8731A8, 620915680, C101860033
GS0423	FORD	Mondeo I		02/93→08/96	8	19	256	85	630	R22	R22	93BBF406A10BB
GS0424	PEUGEOT	306 Break (7E)		05/97→04/01	8	19	624	260	400	R25	R25	8731E1, 9624450980
GS0425	NISSAN	Primera (P11) EQ5		06/96→03/02	10	22	520	180	665	R22	R22	904522F705, 904522F725, 904526F100
GS0426	MG	ZR		06/01→	8	19	599	220	360	R22	R22	BHE45001, BHE450030
GS0426	ROVER	200 (RF)		03/85→10/95	8	19	599	220	360	R22	R22	BHE45001, BHE450030
GS0426	ROVER	25 (RF)		10/99→	8	19	599	220	360	R22	R22	BHE45001, BHE450030
GS0427	CITROËN	Xsara Break (N2)		10/97→	8	19	656	260	400	R25	R25	8731E4, 9620677480
GS0428	BMW	3 (E36)		05/95→08/99	8	19	517	190	380	R25	R25	51248171158, 51248217305
GS0429	AUDI	80 Avant, 80 Avant Quatro (8C,B4)		08/91→10/94	8	19	575	220	500	R25	R22	R239827552D
GS0430	MERCEDES	E (W210)(S210)		05/95→03/03	8	19	459,5	180	535	R25	R25	2108800229, 2108800429
GS0432	SKODA	Superb		02/02→	8	19	279	95	520	R22	R22	3B5827550E
GS0432	VW	Passat V (3B3)		09/00→	8	19	279	95	520	R22	R22	3B5827550E
GS0433	RENAULT	Laguna II Grandtour (K74)	with window	03/01→	8	19	534,5	220	480	R25	R25	8200000903
GS0434	BMW	7 (E38)		06/94→11/01	10	22	326	105	800	R25	R25	51238150077
GS0435	ALFA ROMEO	156 SW (932)		05/00→	8	19	348	120	620	R22	R22	60664833
GS0436	FIAT	Stilo Multiwagon	with window	10/03→	10	22	603	220	740	R22	R22	46762434, 51709681, 51736743, 51736744
GS0437	LANCIA	Delta II (836)		05/93→08/99	8	19	365	135	620	R25	R25	46433702
GS0438	ALFA ROMEO	145 (930)		01/94→01/01	8	19	310	110	580	R25	R25	60567794
GS0439	BMW	5 (E39)		09/95→06/04	10	22	333	100	700	R25	R25	51238174866
GS0440	PEUGEOT	806	up to Vet. 07632	10/97→08/02	8	19	632	215	600	R22	R22	8731E5
GS0440	PEUGEOT	806	up to Vet. 07632	10/97→08/02	8	19	632	215	600	R22	R22	8731E5
GS0441	VOLVO	S 40		07/95→01/04	8	19	750	315	300	R25	R25	819865
GS0442	FIAT	Multipla		04/99→	8	19	213	48	200	R25	R25	46559850, 46559858
GS0443	MG	ZS		07/01→	8	19	515	200	445	R25	R25	BHE140010
GS0443	ROVER	400 (RT)		05/95→03/00	8	19	515	200	445	R25	R25	BHE140010
GS0443	ROVER	45 (RT)		02/00→	8	19	515	200	445	R25	R25	BHE140010
GS0444	ALFA ROMEO	166 (936)		09/98→10/00	8	19	438	170	480	R25	R25	60658924
GS0445	BMW	5 (E34)		02/88→11/95	8	19	365	140	410	R2	R35	51241934270, 51248110327
GS0446	BMW	5 (E34)		02/88→11/95	8	19	365	145	480	R2	R35	51242231663
GS0447	CHEVROLET	Tacuma/Rezzo		09/00→	10	22	382	140	660	R23	R23	96310381, 96394240, 96940087
GS0448	HONDA	CRV (ED)	tailgate window	10/95→	8	19	540	130	170	R23	R23	04741S10000
GS0449	FIAT	Doblo (without Malibu)		03/01→	8	19	866	345	370	R2	R35	46824070, 46810696
GS0450	AUDI	TT Coupe (8N)		06/98→	8	19	405	160	620	R22	R22	8N8827552A, 8N8827552B
GS0451	BMW	3 (E30)		07/87→06/94	8	19	635	259	290	R22	R22	51241947096
GS0452	BMW	3 (E36)		03/94→09/94	8	19	611	205	350	R22	R22	51248146290

MAGNETI MARELLI					L max A1 A2 Ø1 Ø2							O.E.
					Ø1 [mm]	Ø2 [mm]	L max	S [mm]	F [N]	A1	A2	
GS0453	CITROËN	BX Break		08/85→11/94	8	19	653	260	400/463	R22	R22	9560649080, 95606490
GS0454	CITROËN	C2		09/03→	8	19	460	180	380	R22	R22	8731H8, 9641721980
GS0455	CITROËN	Evasion	up to Vet. 06944	06/94→11/95	8	19	627	230	630	R22	R22	8731A3
GS0456	CITROËN	Evasion	up to Vet. 07632	10/97→08/02	8	19	632	215	600	R22	R22	8731E5
GS0457	CITROËN	Evasion	from Vet. 06945 to 07631	11/95→10/97	8	19	610	200	600	R22	R22	8731C1
GS0458	CITROËN	XM, XM Break (Y3, Y4)		05/89→10/00	8	19	546	225	220	R22	R22	9563914480
GS0459	FIAT	Ulysse (179AX)		08/02→	8	19	631	230	440	R22	R22	1489342080
GS0459	LANCIA	Pherda (179)		08/02→	8	19	631	230	440	R22	R22	1489342080
GS0460	AUDI	A3 (8P1)		05/03→	8	19	485	193	460	R25	R25	8P3827552A, 8P3 827 552 A
GS0461	AUDI	A3 (8P1)		05/03→	8	19	494	185	490	R25	R25	8P3827552D
GS0462	CITROËN	C5, C5 Break		03/01→	8	19	506	205	120/180	R25	R25	792514
GS0463	FIAT	Palio (178BX)		04/96→	8	19	477	188	360	R25	R25	46792437, 46530124
GS0464	FORD	Escort III, IV		07/80→07/90	8	19	577	226	275	R25	R25	86ABB406A10GA
GS0465	FORD	Escort III, IV		07/80→07/90	8	19	577	226	320	R25	R25	86ABB406A10GA
GS0466	FORD	Fiesta II		08/83→03/89	8	19	614	229	300	R25	R25	84FBB406A10CB
GS0467	FORD	Focus (DFW)		11/98→10/01	8	19	280	80	465	R25	R25	1071732, 1072394, 1092108, 1114031, XS41F406A10AC, XS41F406A10AD, XS41F406A10AE
GS0468	FORD	Focus (DFW)		10/01→	8	19	280	80	420	R25	R25	1124003, XS41F406A10AF
GS0469	MERCEDES	C (S203)		03/01→	8	19	512	200	470	R25	R25	2037400045
GS0470	PEUGEOT	206 SW		07/02→	8	19	580	210	535	R25	R25	8731G5, 9642209980
GS0471	PEUGEOT	406 (8B), 406 Break (8E/F)		10/95→05/04	8	19	685	265	200	R25	R25	792508, 792510, 9628157780, 9630662480
GS0472	PEUGEOT	406 (8C)		03/97→	8	19	286	100	310	R25	R25	8731C9, 0347040
GS0473	RENAULT	Espace IV (JK0)		11/02→07/04	8	19	395	150	230	R25	R25	8200091749
GS0474	RENAULT	Espace IV (JK0)		07/04→	8	19	395	150	470	R25	R25	8200362400
GS0475	RENAULT	Laguna II Grandtour (K74)	without openable window	03/01→	8	19	535	220	425	R25	R25	8200025317
GS0476	RENAULT	Megane Grand Scenic II	with openable window	06/03→	8	19	520	175	640	R22	R22	8200119498, 8200212598
GS0476	RENAULT	Megane Scenic II (JM)	with openable window	06/03→	8	19	520	175	640	R22	R22	8200119500, 8200377789
GS0477	RENAULT	Safrane II		08/96→12/00	8	19	573	230	530	R25	R25	7700413083
GS0478	RENAULT	Safrane II		08/96→12/00	8	19	573	230	620	R25	R25	7700414002
GS0479	ROVER	400 (RT)		05/95→03/00	8	19	515	200	490	R25	R25	BHE140020
GS0479	ROVER	45 (RT)		02/00→	8	19	515	200	490	R25	R25	BHE140020
GS0480	ROVER	75 Tourer (RJ)	tailgate window	08/01→	8	19	398	120	180	R25	R25	BHE500070
GS0481	SEAT	Alhambra (7MS)		08/00→	8	19	452	177	350	R25	R25	7M3827550A
GS0481	VW	Sharan (7M)		08/00→	8	19	452	177	350	R25	R25	7M3827550A
GS0482	VOLVO	S 60		11/00→	8	19	270	75	420	R25	R25	8600233, 8650233
GS0483	LANCIA	Kappa (838)		08/94→10/01	8	19	575	230	440	R25	R25	82486283
GS0484	LANCIA	Kappa (838A)		08/94→10/01	8	19	280	95	500	R25	R25	46429507
GS0485	LANCIA	Lybra (839)		07/99→	8	19	400	150	280	R25	R25	46763101

MAGNETI MARELLI

					L max							O.E.
					Ø1 [mm]	Ø2 [mm]	L max	S [mm]	F [N]	A1	A2	
GS0486	TOYOTA	Corolla (E12U)	3 5	01/02→	8	19	468	163	440	R25	R22	6895002040, 6896002030, 689500W170, 689600W170
GS0487	TOYOTA	Corolla Wagon (E12J)		01/02→	8	19	434	153	585	R25	R25	689500W140, 689600W140
GS0488	VOLVO	C 70		03/97→09/02	8	19	298	90	600	R25	R25	9485706
GS0489	VOLVO	S 40 II		01/04→	8	19	320	100	360	R25	R25	30674203, 30674971
GS0490	VOLVO	S 80		05/98→	8	19	364	132	310	R25	R25	9483297, 9483299
GS0491	VOLVO	S 80		05/98→	8	19	363	132	370	R25	R25	30649439
GS0492	VW	Polo (9N)		10/01→	8	19	500	200	310	R25	R22	6Q0823359, 6Q0823359A
GS0493	SUZUKI	Jimny		81→87	8	19	465	169	113	R2	R35	81860A80100
GS0493	SUZUKI	SA310 (Swift)		82→89	8	19	465	169	113	R2	R35	81860A80100
GS0493	SUZUKI	SA413 (Swift)		82→89	8	19	465	169	113	R2	R35	81860A80100
GS0493	SUZUKI	Samurai (SJ)		11/88→	8	19	465	169	113	R2	R35	81860A80100
GS0493	SUZUKI	Sierra		82→89	8	19	465	169	113	R2	R35	81860A80100
GS0493	SUZUKI	Samurai SJ410		09/81→12/88	8	19	465	169	113	R2	R35	81860A80100
GS0493	SUZUKI	Samurai SJ413		09/84→08/90	8	19	465	169	113	R2	R35	81860A80100
GS0494	SUZUKI	Vitara (ET, TA)		07/88→03/98	8	19	558	200	135	R2	R35	9390085C00
GS0495	SAAB	9000 CC	from Vet. -H1007932, -H8000100	09/84→12/98	8	19	700	295	400	R2	R35	6956288
GS0496	SAAB	9000 CS	from Vet. -H1007932, -H8000100	09/84→12/98	8	19	490	195	610	R22	R22	4006078
GS0497	SAAB	9000 CD		04/85→12/98	8	19	226	63	100	R2	R35	6976369
GS0498	SAAB	9000 CC	up to Vet. -H1007931, -H8000099	09/84→12/98	8	19	670	278	320	R2	R35	9253964
GS0499	SAAB	9000 CC	up to Vet. -H1007931, -H8000099	09/84→12/98	8	19	670	294	345	R2	R35	6956262
GS0500	SAAB	9000 CC	from Vet. -H1007932, -H8000100	09/84→12/98	8	19	700	295	345	R2	R35	6956270
GS0501	VOLVO	V 50		04/04→	8	19	430	160	470	R25	R25	30674718, 30716189
GS0502	FIAT	Ritmo II		07/83→88	8	19	600	250	540		R35	39481770
GS0503	FORD	Mondeo III		11/00→	8	19	300	99	560	R25	R25	1117246, 1S71F406AD10AB
GS0504	CITROËN	Xantia (X1)		07/93→01/98	8	19	600	230	510	R23	R23	873196, 873197
GS0505	CITROËN	XM (Y3, Y4)		05/89→10/00	8	19	837	315	365	R23	R23	96095456
GS0506	CITROËN	XM Break (Y3,Y4)		05/89→10/00	8	19	630	220	570	R23	R23	96026964
GS0507	CITROËN	ZX Break (N2)		10/93→03/98	8	19	540	220	470/520	R23	R23	9612212280
GS0508	DAEWOO	Nubira	5	05/97→03	8	19	435	165	500	R23	R23	96301822
GS0509	HONDA	Concerto		10/90→03/95	8	19	680	270	390	R23	R23	74820SK3E20, GTS122, BHE38017
GS0510	VOLVO	480 E		04/86→07/96	8	19	534	217	200	R23	R23	3470350, 3436644
GS0511	AUDI	A6 Avant (4B)	with heated window and decreased open angle from Vet. 4B-Y-120001	04/00→	10	22	483	175	740	R22	R22	4B9827552H
GS0511	AUDI	A6 Avant (4B,C5)	with heated window and decreased open angle up to Vet. 4B-Y-120000	08/97→04/00	10	22	483	175	740	R22	R22	4B9827552D, 4B9827552H
GS0512	AUDI	A6 Avant (4B)	with decreased open angle from Vet. 4B-Y-120001	04/00→	10	22	483	175	690	R22	R22	4B9827552J

					L max							O.E.
					Ø1 [mm]	Ø2 [mm]	L max	S [mm]	F [N]	A1	A2	
GS0513	AUDI	Allroad (4BH)		05/00→	10	22	480	173	690	R22	R22	4B9827552N
GS0514	DAEWOO	Tacuma/Rezzo		09/00→	10	22	382	140	660	R23	R23	96310381, 96394240
GS0515	FORD	Transit		03/00→	10	22	850	340	670	R22	R22	4346105, 1C15V406A10AD, 1C15V406A10EA
GS0516	OPEL	Sintra		11/96→04/99	10	22	725	210	819	R22	R22	10233373, 132730, 10400855, 132737, 10233372, 1 32 729, 10400854, 132736, 10324007, 132674
GS0516	VAUXHALL	Sintra		11/96→04/99	10	22	725	210	819	R22	R22	10233373, 132730, 10400855, 132737, 10233372, 1 32 729, 10400854, 132736, 10324007, 132674
GS0517	OPEL	Vivaro		08/01→	10	22	905	307	730	R23	R23	91168256, 4414419
GS0517	VAUXHALL	Vivaro		08/01→	10	22	905	307	730	R23	R23	91168256, 4414419
GS0518	PEUGEOT	406 (8B) (8E/F) (8C)		10/95→05/04	10	22	195	55	1100	R22	R22	792507
GS0519	RENAULT	Espace IV (JK0)	without openable window	11/02→	10	22	730	200	700	R22	R22	8200021974
GS0520	RENAULT	Espace IV (JK0)	with openable window	11/02→	10	22	730	200	760	R22	R22	8200021975
GS0521	BMW	5 (E39)	(use original mounting from the cylinder side)	09/95→05/96	8	19	335	95	520	R25	R27	51248159239
GS0522	BMW	5 (E34)	(use original mounting from the cylinder side)	09/91→02/97	8	19	675	263	360	R23	R27	51248149327, 51248149328, 51248230369, 51248230370
GS0523	BMW	5 (E34)		02/88→02/97	8	19	242	80	380	R2	R38	51231944119
GS0524	BMW	7 (E38)	(use original mounting from the cylinder side)	06/94→11/01	8	19	310	90	640	R25	R27	51248171480
GS0525	NISSAN	Primera (P10) EC4		06/90→06/96	10	22	273	92	680	R23	R23	8443090J00
GS0526	NISSAN	Primera (P10) EC4		06/90→06/96	10	22	273	92	720	R23	R23	8443090J10
GS0527	RENAULT	Megane Coach/Coupe (DA0)		09/96→11/02	8	19	180	55	480	R25	R1	7700838487, 7700838690
GS0528	OPEL	Corsa A		09/82→03/93	10	22	613,5	248	620	R39	R39	90127137, 132713, 90138517, 132696
GS0528	VAUXHALL	Nova		09/82→03/93	10	22	613,5	248	620	R39	R39	90127137, 132713, 90138517, 132696
GS0529	VOLVO	850 (855) (LW)		08/92→12/96	10	29	270	70	1600	R39	R37	9485548, 9187315, 3509482
GS0529	VOLVO	V 70		01/97→03/00	10	29	270	70	1600	R39	R37	9485548, 9187315, 3509482
GS0530	ALFA ROMEO	155 (167)		01/92→12/97	8	19	280	90	500	R25	R23	60540532
GS0531	ALFA ROMEO	155 (167)		01/92→12/97	8	19	280	90	600	R25	R23	60583192
GS0532	AUDI	80, 80 Quatro (89,8A)		09/86→09/91	10	22	272	90	670	R23	R23	893827552A
GS0532	AUDI	90, 90 Quatro (89,8A)		04/87→12/91	10	22	272	90	670	R23	R23	893827552A
GS0533	AUDI	Coupe, Coupe Quatro (8C)		11/88→12/95	8	19	605	247	340	R25	R22	895823552A, 895523552A
GS0534	BMW	5 (E39)	tailgate window	03/97→06/04	8	19	241	70	560	R2	R23	51248190688
GS0535	CITROËN	C5 Break	(use original mounting from the cylinder side)	03/01→	8	19	288	95	250	R22	R27	8731F7, 9640894580
GS0536	FIAT	Stilo Multiwagon	with decor	10/03→	10	22	603	198	810	R22	R22	51716995, 51736745
GS0537	FIAT	Stilo Multiwagon	with decor and openable window	10/03→	10	22	603	198	850	R22	R22	51716996, 51736746
GS0538	FORD	Sierra Sport		08/82→02/93	10	22	489	144	720	R22	R22	86BBA406A10BA, 86BBA406A10AA
GS0539	LANCIA	Delta II (836)		05/93→08/99	10	22	364	130	800	R25	R25	82473205
GS0540	LANCIA	Kappa SW (838B)		07/96→10/01	8	19	568	215	410	R25	R25	46309135

MAGNETI MARELLI

												O.E.
					L max							
					Ø1 [mm]	Ø2 [mm]	L max	S [mm]	F [N]	A1	A2	
GS0541	MAZDA	323 III (BF)	R	07/85→09/89	8	19	667	215	375	R22	R22	B1287F26
GS0542	MERCEDES	Vaneo (V414)		02/02→	8	19	695	272	640	R22	R22	4149800064
GS0543	RENAULT	Laguna I (B56)	5 with side shield	03/94→03/01	8	19	596	210	450	R22	R25	7700846772
GS0544	RENAULT	Laguna I (B56)	5 with side shield	03/94→03/01	8	19	596	210	510	R22	R25	7700846773
GS0545	RENAULT	Espace II (J63)		04/91→11/96	6	15	185	55	100	R26	R26	6025100991
GS0546	RENAULT	Laguna I Grandtour (K56)	tailgate window	93/94→03/01	6	15	502	200	125	R25	R25	7700838006
GS0547	RENAULT	Laguna II Grandtour (K74)	tailgate window	03/01→	6	15	530	213	110	R25	R25	7703024021, 8200000896
GS0548	RENAULT	R 25		09/86→02/93	8	19	270	90	540	R23	R35	7701033344
GS0549	RENAULT	Trafic (FL, JL)		03/01→	8	19	905	307	730	R23	R23	8200162697
GS0550	RENAULT	Espace IV (JK0)	tailgate window	11/02→	6	15	547	190	170	R25	R25	8200025105
GS0551	RENAULT	Megane Grand Scenic II	tailgate window	01/04→	6	15	365	135	135	R25	R25	8200130187
GS0551	RENAULT	Megane Scenic II (JM)	tailgate window	06/03→	6	15	365	135	135	R25	R25	8200130187
GS0552	RENAULT	R 19 II Chamade (L53)		04/92→12/95	8	19	310	89	650	R22	R22	7700824817
GS0553	RENAULT	Safrane I (without Baccara version)		04/92→07/96	8	19	572	215	580	R22	R23	7700811019, 7700831959
GS0554	RENAULT	Safrane I Baccara		04/92→07/96	8	19	572	215	670	R22	R23	7700829825, 7700832534
GS0555	SAAB	9000		09/84→05/98	6	15	547	214	225	R2	R9	9270240
GS0556	SAAB	9000 CS	from Vet. -H1007932, -H8000100	09/84→12/98	10	22	492	195	660	R22	R22	4006060
GS0557	SAAB	9-5 (YS3E)		09/97→	8	19	280	90	550	R22	R23	4855094, 5117015, 5360839
GS0558	HONDA	Civic III (EC, ED, EE)	3	09/87→09/91	8	19	635	225	200	R25	R25	74820SH3305
GS0559	HONDA	Civic IV (EG)	3	10/91→11/95	8	19	464	166	160	R25	R25	74820SR3003
GS0560	HYUNDAI	Elantra (XD)		06/00→	8	19	485	185	580	R25	R25	817712D210
GS0561	HYUNDAI	Sonata IV (EF)		10/01→	8	19	490	187	380	R25	R25	811613D000
GS0562	VOLVO	440, 460		09/88→07/96	8	19	550	222	475	R23	R23	3470348, 3470350, 3436644
GS0563	VW	Caddy I (14)		01/82→95	8	19	500	190	220	R2	R22	147827550
GS0564	VW	Corrado (53I)		08/88→12/95	8	19	640	235	390	R22	R38	535827550A
GS0565	VW	Golf II (19E)	up to Vet. 19E780000	08/83→06/84	8	19	500	200	270	R22	R35	1918827550
GS0566	VW	Transporter T5		04/03→	10	28	755	210	970	R22	R22	7H0827550
GS0567	VW	Multivan V		04/03→	10	28	755	210	1080	R22	R22	7H0827550B
GS0568	MERCEDES	C (W203) (S203) (CL203)	R	05/00→	8	19	570	200	280	R22		2038800029
GS0569	MERCEDES	C (W203) (S203) (CL203)	R	05/00→	8	19	535	200	280	R22		2038800429
GS0570	MITSUBISHI	Galant IV (E3A) GTI 16V		11/88→12/92	8	19	650	250	460	R22	R22	MB926947
GS0571	NISSAN	Almera Tino (V10)		08/00→	8	19	523	202	530	R25	R25	90450BU000, 90450BU000
GS0572	NISSAN	Primera (P11) EQ5		06/96→03/02	8	19	520	185	730	R22	R22	904522F715, 904526F126
GS0573	NISSAN	Primera Traveler (WP11)		04/98→07/02	8	19	527	200	660	R22	R22	904528F825
GS0574	NISSAN	Serena (C23M) LX	L	11/92→	10	22	769	247	475	R22		904519C104
GS0575	PEUGEOT	605		01/94→12/98	8	19	195	50	760/860	R22	R22	792505, 9602673980
GS0576	SEAT	Toledo III (5P2)		10/04→	8	22	870	370	370	R25	R22	5P5827550
GS0577	OPEL	Corsa A		09/82→03/93	8	19	613,5	248	560	R39	R39	90127136, 132712, 90119276, 132694
GS0577	VAUXHALL	Nova		09/82→03/93	8	19	613,5	248	560	R39	R39	90127136, 132712, 90119276, 132694

MAGNETI MARELLI					L max A1 A2 Ø1 Ø2							O.E.
					Ø1 [mm]	Ø2 [mm]	L max	S [mm]	F [N]	A1	A2	
GS0578	OPEL	Corsa A		09/82→03/93	8	19	613,5	248	640	R39	R39	90127138, 132714, 90138518, 132695
GS0578	VAUXHALL	Nova		09/82→03/93	8	19	613,5	248	640	R39	R39	90127138, 132714, 90138518, 132695
GS0579	MITSUBISHI	Colt IV (CAA)		04/92→04/96	8	19	459	172	230	R25	R25	MR138596
GS0580	NISSAN	Primera Traveler (W10)		07/90→03/98	10	22	559	220	330	R25	R25	9045079N02
GS0581	SUZUKI	Alto I (SS80)		06/82→12/85	8	19	670	270	360	R25	R25	81860M70F10000, 81850M76G20A, 81860M76G20A
GS0581	SUZUKI	Alto II (EC)		01/86→11/93	8	19	670	270	360	R25	R25	81860M70F10000, 81850M76G20A, 81860M76G20A
GS0581	SUZUKI	Alto III (EF)		09/94→06/02	8	19	670	270	360	R25	R25	81860M70F10000, 81850M76G20A, 81860M76G20A
GS0582	BMW	5 (E39)	(use original mounting from the cylinder side)	05/96→07/03	8	19	345	100	520	R25	R27	51248222913
GS0583	JEEP	Cherokee	after lifting (use original mounting from the cylinder side)	97→01	10	22	545	195	750	R22	R27	
GS0584	TOYOTA	Avensis (T22)		09/97→10/00	8	19	498	225	540	R25	R25	6896009050, 6896009080
GS0584	TOYOTA	Avensis (T22)		09/97→10/00	8	19	498	225	540	R25	R25	6895009050, 6895009080
GS0585	AUDI	80, 80 Quatro (89,8A)		09/89→09/91	8	19	615	260	400	R2	R35	893823360
GS0585	AUDI	90, 90 Quatro (89,8A)		04/87→12/91	8	19	615	260	400	R2	R35	893823360
GS0586	PORSCHE	911, Carrera, Turbo, Targa		08/68 → 09/01	8	19	255	86	600	R2	R35	91151233102
GS0587	PORSCHE	911, Carrera, Turbo, Targa		08/68 → 09/01	8	19	255	86	370	R2	R35	91151233101
GS0588	ALFA ROMEO	33 Restyling (907B)	(exclude Sweden)	01/90→09/94	8	19	548	286	230	R22	R9	60505771
GS0589	AUTOBIANCHI	Y10 (156)		03/85→12/95	8	19	600	250	160	R25	R25	60617400, 5970097
GS0590	BMW	5 (E28)		05/81→12/87	6	15	440	142	380	R2	R9	51231868555, 51231907962, 51231927129
GS0591	BMW	6 (E24)		05/79→04/89	8	19	500	200	230	R2	R35	51231869147
GS0591	BMW	7 (E23)		02/77→08/86	8	19	500	200	230	R2	R35	51231869147
GS0592	CITROËN	BX		01/82→10/86	8	19	650	275	240/300	R2	R35	95568454, 9556845480
GS0593	CITROËN	BX		10.86→11/94	8	19	650	275	240/300	R25	R35	95635988, 9563598880
GS0594	CITROËN	BX GT - Sport - IE		01/82→10/86	8	19	650	275	310/370	R2	R35	95598526, 9559852680
GS0595	CITROËN	BX Turbo, BX 19 GTI		10.86→12/89	8	19	640	278	300	R25	R35	
GS0596	CITROËN	BX Turbo, 19 TRS Athena, 19 TZS IE		01/90→11/94	8	19	650	275	310/370	R25	R35	95635989, 9563598980
GS0597	CITROËN	CX		09/74→12/91	8	19	579	235	260/320	R2	R35	5429798
GS0598	CITROËN	AX		86→12/98	8	19	544	224	240/300	R25	R25	95631956, 9563195680
GS0599	ALFA ROMEO	155 (167)		01/92→12/97	8	19	675	279	210	R36	R36	60604174, 60564112
GS0600	CITROËN	CX Break		09/74→12/91	8	19	580	245	380	R16	R35	5459705, 5490307
GS0601	FIAT	Strada		07/83→88	8	19	600	250	540	R3	R35	39481770
GS0601	SEAT	Ritmo/Roda (022A)		07/83→11/88	8	19	600	250	540	R3	R35	XO39481770
GS0602	FORD	Orion II	without electrical opening	04/86→90	8	19	245	76	330	R2	R35	86ABF406A10AA, D83ABF406A10BA
GS0603	FORD	Scorpio I		01/92→09/94	8	19	501	175	780	R22	R22	85GBA406A10DD
GS0604	SAAB	99		09/74→12/84	8	19	500	201	600	R2	R35	9231796, 9233727
GS0604	SAAB	900 I Combi Coupe		09/78→06/84	8	19	500	201	600	R2	R35	9231796, 9233727

MAGNETI MARELLI

					L max							O.E.
					Ø1 [mm]	Ø2 [mm]	L max	S [mm]	F [N]	A1	A2	
GS0604	SAAB	99I Combi Coupe		03/76→06/80	8	19	500	201	600	R2	R9	9231796, 9233727
GS0605	FORD	Sierra XR4, RS		08/82→02/93	10	22	490	144	780	R22	R22	88BBA406A10BAD, 83BBA406A10CD
GS0606	HONDA	Civic VI (EU, EP) (engines D14Z5, D16V2, D16W7, D17A2)		2001	8	19	502	195	400	R22	R28	04741S6A000
GS0607	HYUNDAI	Matrix (FC)		06/01→	8	19	570	200	630	R25	R22	8177017010, 8177017030
GS0608	LANCIA	Dedra (835)		01/89→07/99	8	19	268	83,5	450	R36	R36	82437256
GS0609	LANCIA	Delta I (831)		09/79→05/93	8	19	505	180	430	R36	R36	82336687
GS0610	LANCIA	Prisma (831)		03/83→06/89	8	19	330	116	340	R36	R36	82380453
GS0611	MERCEDES	S (W220)		10/98→08/05	8	19	580	205	230	R22	R22	A2208800329, 2208800329
GS0612	MERCEDES	V Kasse (W638)		02/96→	10	27	772	322	630	R22	R22	6389800364
GS0613	MERCEDES	V Kasse (W638)		02/96→	10	27	775	322	530	R22	R22	6389800464
GS0614	MG	ZS		07/01→	8	19	515	200	490	R25	R25	BHE140020
GS0615	MG	ZT-T	tailgate window	10/01→	8	19	398	120	180	R25	R25	BHE500070
GS0616	NISSAN	Maxima QX (A32)		01/95→08/00	8	19	390	165	410		R23	6547040U10, 6547140U10
GS0617	PEUGEOT	505		07/83→09/92	8	19	475	198	180/240	R2	R25	862214, 9252344980
GS0618	PEUGEOT	806	up to Vet. 06944	06/94→11/95	8	19	627	230	570	R2	R10	8731A3
GS0619	PEUGEOT	806	from Vet. 06945 do 07631	11/95→10/97	8	19	610	200	560	R2	R10	8731C1
GS0620	PEUGEOT	305 I, 305 II		02/78→09/87	10	22	265	80	820	R22	R22	862215, 9255607980
GS0622	RENAULT	Espace I (J11)		12/84→03/91	6	15	225	80	100	R26	R26	6025001988, 6025003919
GS0623	RENAULT	R 11		12/86→90	10	22	431	121	680/740	R25	R25	7702149568
GS0624	RENAULT	R 21		05/89→04/94	8	19	677	274	340/400	R23	R23	7700795698, 7700795731
GS0625	RENAULT	R 21 Nevada		03/86→04/94	8	19	486	170	585	R2	R35	7700785587
GS0626	RENAULT	R 25		04/84→08/86	8	19	268	90	540	R2	R35	7700753540
GS0627	ROVER	200 (XH, XW) GTI		03/85→10/95	8	19	680	270	360	R23	R23	GSA930, GTS122, BHE38017
GS0628	SAAB	900 I Combi Coupe		11/78→09/93	8	19	500	195	650	R2	R35	9293580
GS0629	SAAB	900 II (YS3D)		10/93→03/98	8	19	525	210	240	R22	R22	4323994
GS0630	SAAB	9-5 (YS3E)		10/98→	10	28	396	108	1550	R39	R39	4699260
GS0631	SAAB	9-5 (YS3E)			8	19	763	350	200	R22	R22	
GS0632	SEAT	Malaga (023A)		11/84→12/93	8	19	254	85	340	R2	R35	
GS0633	SMART	Smart (MC01)		07/98→	6	15	305	109	130	R23	R23	113000013, 0000618V007
GS0634	TOYOTA	Corolla Verso (E12J)		01/02→	8	19	510	172	545	R25	R25	689500W101, 689600W091
GS0635	VOLVO	340, 360		76→91	8	19	550	200	460	R23	R23	3344245
GS0636	VOLVO	S 60		11/00→	6	15	244	90	400	R25	R25	9154605
GS0636	VOLVO	S 80		05/98→	6	15	244	90	400	R25	R25	9154605
GS0636	VOLVO	V 70		03/00→	6	15	244	90	400	R25	R25	9154605
GS0636	VOLVO	XC 70		09/00→	6	15	244	90	400	R25	R25	9154605
GS0637	VW	Polo (86C)		10/81→04/86	8	19	515	215	550	R23	R9	867827550, 7827550A
GS0638	VW	Transporter T3	M308 hydro lift version for Vet. 25C102001 - 25N015000	05/79→07/92	8	19	514	200	300	R2	R22	251829331B, 251829332
GS0639	BMW	7 (E32)		09/86→06/94	8	19	254	95	490	R2	R35	51241908431
GS0640	BMW	7 (E32)		09/86→06/94	6	15	254	90	420	R2	R35	11811869147, 51231908465
NEW GS0663	AUDI	A4 Avant (8K5) B8	with automatic opening	04/08→	8	19	502	205	530	R22	R22	8K9 827 552, 8K9 827 552 A

						Ø1 [mm]	Ø2 [mm]	L max	S [mm]	F [N]	A1	A2	O.E.
NEW	GS0664	OPEL	Frontera B (6B)	rear window	10/98→2004	8	19	499	145	190	R22	R22	132673, 97211748
NEW	GS0669	BMW	5 Touring (E61)		06/04→	8	19	313	112	330	R25	R25	51237008745, 51 24 7 008 754
NEW	GS0670	BMW	1 (E82, E88)		07→	8	19	374	140	350	R25	R25	51237118370
NEW	GS0671	MINI	Mini One/Cooper/Works (R52)		07/04→	8	19	577	225	270	R22	R28	51237175020
NEW	GS0673	VW	Golf VI		10/08→	8	19	728	310	265	R28	R22	5K0 823 359 D
NEW	GS0674	AUDI	A3 (8P1)		08/03→	8	19	712	305	290	R28	R22	8P0 823 359 A; 8P0 823 359 B
NEW	GS0675	LAND ROVER	Range Rover II (LP)		07/94→07/02	8	19	405	160	300	R22	R22	ALR1050
NEW	GS0676	FORD	Kuga	rear window	03/08→	8	19	484	190	200	R28	R22	1520777; 8V41-S406A10-BB
NEW	GS0677	FORD	Fiesta VI		10/08→	8	19	544	218	290	R28	R22	1523356; 8A61-A406A10-AB
NEW	GS0678	FORD	KA		10/08→	8	19	418,5	155	390	R25	R25	1542413; 51794232; 9551→B460A10→AA
NEW	GS0679	CITROËN	C5		02/08→	8	19	375	135	495	R42	R25	8731R7, 9682256580
NEW	GS0680	VW	Golf VI		10/08→	8	19	439,5	157	550	R25	R22	5K6 827 550 B
NEW	GS0681	AUDI	Q5		11/08→	8	19	500	190	600	R22	R22	8R0 827 552
NEW	GS0682	FORD	Kuga		03/08→	8	19	657	275	480	R22	R22	1537538; 8V41-S406A10-AD
NEW	GS0683	CITROËN	C5 Break		02/08→	8	19	547	222	535	R22	R22	8731R6
NEW	GS0684	CITROËN	Berlingo		04/08→	10	22	620	225	625	R22	R25	8731.S0
NEW	GS0684	PEUGEOT	Partner Tapee		04/08→	10	22	620	225	625	R22	R25	8731.S0
NEW	GS1044	FIAT	Scudo combinato (220P)		02/96→	10	22	700	172	1050	R22	R22	8731.P5, 8731.Q9
NEW	GS1044	CITROËN	Jumpy	klapa bagażnika	01/07→	10	22	700	172	1050	R22	R22	8731.Q9
NEW	GS1044	PEUGEOT	Expert	klapa bagażnika	01/07→	10	22	700	172	1050	R22	R22	8731.Q9
NEW	GS0685	CITROËN	Jumpy/Dispatch		01/07→	8	19	700	175	1050	R22	R22	8731P5, 1401103980, 8731Q9, 1498071080
NEW	GS0686	SKODA	Superb 3T4, superb kombi (3T5)		03/08→	8	18,5	728	310	315	R28	R22	3T0 823 359
NEW	GS0687	SKODA	Superb (3T4)		03/08→	8	18,5	538	205	650	R22	R22	3T5 827 550
NEW	GS0688	VW	Passat CC		06/08→	8	18,5	690	280	380	R28	R22	3C8 823 359
NEW	GS0689	VW	Scirocco (137)		09/08→	8	18,5	457	167	320	R22	R22	1K8 827 550A
NEW	GS0690	LANCIA	Delta III (844)		09/08→	8	18,5	644	265	300	R22	R28	51809199
NEW	GS0691	ALFA ROMEO	Brerra		01/06→2010	8	18,5	470	180	350	R22	R22	60694616, 0060694616
NEW	GS0692	ALFA ROMEO	Mito (955)		09/08→	8	18,5	456	165	320	R25	R22	50515442, 50508706
NEW	GS0693	RENAULT	Clio Grandtour (KR0/1)		02/08→	8	18,5	469,5	185	580	R28	R28	8200 583 852
NEW	GS0694	RENAULT	Megane III (BZ0)		11/08→	8	18,5	431	160	600	R22	R22	9045 100 01R
NEW	GS0695	RENAULT	Megane III (DZ0/1)		11/08→	8	18,5	664	275	265	R22	R22	9045 100 02R
NEW	GS0696	RENAULT	Laguna III (BT0/1)		10/07→	8	18,5	495	205	610	R25	R25	8443 000 01R
NEW	GS0697	RENAULT	Laguna III Grandtour (KT0/1)		10/07→	8	18,5	569	240	670	R25	R25	8443 000 04R
NEW	GS0698	RENAULT	Laguna III Grandtour (KT0/1)	rear window	10/07→	6	15	334	130	270	R25	R28	9046 000 01R
NEW	GS0699	BMW	1 (E82), (E88)		10/07→	8	18,5	362	112	260	R25	R25	41 627 166 758
NEW	GS0700	BMW	3 (E92)		09/06→	8	18,5	369	110	320	R25	R25	51 247 129 194
NEW	GS0701	BMW	3 (E93)		03/07→	8	18,5	553	225	220	R25	R25	51 247 129 215
NEW	GS0702	BMW	X5 (E70)		02/07→	8	18,5	410	155	390	R28	R22	51 237 148 346
NEW	GS0702	BMW	X6 (E71, E72)		05/08→	8	18,5	410	155	390	R28	R22	51 237 148 346
NEW	GS0703	MINI	MINI Clubman (R55)	tailgate	10/07→	8	18,5	386,5	145	160	R28	R28	51 247 167 442
NEW	GS0704	JEEP	Grand Cherokee III		06/05→2010	8	18,5	505	205	F585	R28	R25	68025359AA

MAGNETI MARELLI

						Ø1 [mm]	Ø2 [mm]	L max	S [mm]	F [N]	A1	A2	O.E.
NEW	GS0705	MAZDA	6		08/07→	8	18,5	273	85	420	R22	R22	GS1D-56-930C
NEW	GS0706	MAZDA	2 (DE)		06/07→	8	18,5	514	180	F1-335	R22	R28	D651-62-620
NEW	GS0707	HYUNDAI	i30 CW kombi		02/08→	8	18,5	512	198	460	R22	R22	81780-2L200, 81770-2L200
NEW	GS0708	HONDA	CR-V III		10/06→	10	22	625	210	510	R22	R28	74870→SWA→A01/ 74820→SWA→A01
NEW	GS0709	CHRYSLER	300 Touring		09/04→2010	10	22	430,5	130	1050	R28	R28	04589626AA
NEW	GS0710	CHRYSLER	Grand Voyager IV		10/07→	10	22	665	195	765	R28	R28	05109605AC
NEW	GS0711	MAZDA	6 (GH)		08/07→	10	22	496	180	635	R28	R28	GS1M-63-620C
NEW	GS0712	HYUNDAI	i10		01/08→	8	18,5	460,5	174	350	R22	R22	81770-0X000
NEW	GS0713	HYUNDAI	i20		09/08→	8	18,5	414	150	430	R22	R28	81780-1J000, 81770-1J000
NEW	GS0714	HYUNDAI	Santa Fe II (CM) 2.2		03/06→	8	19	441	175	300	R28	R22	81160-2B010
NEW	GS0714	HYUNDAI	Santa Fe II (CM) 2.7 V6		03/06→	8	19	441	175	300	R28	R22	81160-2B000
NEW	GS0715	CHRYSLER	300 C, Touring		09/04→2010	6	15	314	110	355	R28	R22	04589607AA, 5008938AA
NEW	GS0716	CHRYSLER	300 C		09/04→2010	8	18,5	293	104	280	R22	#N/D!	04589589AA
NEW	GS0717	JEEP	Grand Cherokee III	tailgate window	06/05→	8	18,5	380	127	200	R55	R22	68025357AA
NEW	GS0718	JEEP	Grand Cherokee III		06/05→	6	15	346	136	340	R22	R22	55394472AA
NEW	GS0719	MAZDA	6 (GH)		02/08→	10	22	515,5	205	610	R25	R25	GS2A-63-620C
NEW	GS0720	HONDA	Accord Tourer VIII (CM)	L	04/03→	14	28	342	105	1200	R56	R56	04741-SEG-900
NEW	GS0721	PEUGEOT	308 SW	with opening window	09/07→	10	22	537	198	750	R25	R25	8731.Q5, 7000510263E0
NEW	GS0722	PEUGEOT	308 SW	rear window	09/07→	8	19	584	250	150	R25	R25	9683422380
NEW	GS0723	PEUGEOT	308 SW	without opening window	09/07→	8	19	527	188	620	R25	R25	8731.Q7
NEW	GS0723	SSANGYONG	Kyron		05/05→	8	19	527	188	620	R25	R25	7145009000, 7146009000
NEW	GS0724	MITSUBISHI	Colt VI	2	06/04→2008	8	19	440	170	470	R22	R22	MR959243
NEW	GS0725	MITSUBISHI	Colt VI	4	06/04→2008	8	19	590	245	460	R22	R22	MR959247
NEW	GS0726	VOLVO	S80 II	maska silnika	03/06→	8	19	283	101,5	450	R22	R22	30649516
NEW	GS0726	VOLVO	V70 III		08/07→	8	19	283	101,5	450	R22	R22	30649516
NEW	GS0726	VOLVO	XC70 III	maska silnika - automatyczna	08/07→	8	19	283	101,5	450	R22	R22	30649516
NEW	GS0727	VOLVO	S 80 II		03/06→	8	19	291	91	600	R22	R22	30779837, 30649836
NEW	GS0728	OPEL	Insignia		07/08→	8	19	721,5	313	180	R22	R22	1180016, 13252173
NEW	GS0728	VAUXHALL	Insignia		07/08→	8	19	721,5	313	180	R22	R22	1180016, 13252173
NEW	GS0729	FORD	Focus II Turnier (DAW)		11/04→	8	19	585	240	420	R22	R22	01349309, 1349309, 1336230, 4M51N406A10AB, 4M51N406A10AA
NEW	GS0730	SKODA	Octavia II (1Z3)		02/04→	8	19	585,5	245	405	R22	R22	1Z5827550, 1Z5827550B, 1Z5827550C, 1Z5827550D, 1Z5827550E, 1Z5827550F
NEW	GS0731	TOYOTA	Corolla Verso (ZER, ZZE)		03/04→	8	19	531	173	545	R22	R22	68950-0F010, 68960-0F010, 68950-0F011, 68960-0F011, 68950-0F012, 68960-0F012
NEW	GS0732	SKODA	Octavia II (1Z5)		02/04→	8	19	490,5	200	480	R22	R22	1Z9827550
NEW	GS0733	CITROËN	C4 I (LC)		11/04→2010	8	19	545	195	425	R25	R22	9647295480
NEW	GS0734	OPEL	Astra H		03/04→	8	19	424,5	165	450	R22	R22	132743, 132743, 24463829
NEW	GS0735	BMW	3 E46		04/00→05	8	19	366	117	280	R25	R25	51248227895
NEW	GS0736	BMW	3 E46		06/01→01/05	8	19	627	205	660	R22	R22	51247118885, 51247038248, 51248251547

						Ø1 [mm]	Ø2 [mm]	L max	S [mm]	F [N]	A1	A2	O.E.
NEW	GS0737	NISSAN	Almera II (N16)		03/00→2006	8	19	540	210	385	R22	R22	90450-BM400, 90450-BM425
NEW	GS0738	MERCEDES	C (CL203)		03/01→2006	8	19	582	203	460	R22	R22	2039800164
NEW	GS0739	MERCEDES	E (S210)		06/96→03/03	14	28	325	100	1400	R25	R25	0019808064
NEW	GS0739	MERCEDES	W210 E-		06/96→03/02	14	28	325	100	1400	R25	R25	19808064
NEW	GS0740	VW	Golf III (1E7)		07/93→05/98	10	22	175	45	700	R22	R22	1E0827550, 1E0827550B
NEW	GS0742	VW	Scirocco II (53B)		08/80→07/92	8	19	499	205	460	R2	R23	533827550, 533827550A
NEW	GS0742	VW	Sirocco III (53B)		08/87→07/92	8	19	499	205	460	R2	R23	533827550A
NEW	GS0743	AUDI	A6 (A4,C4), A6 Avant (A4,C4)		06/94→10/97	10	22	943	417	380	R22	R57	4A0823359C
NEW	GS0744	AUDI	A4 (8D2,B5), A4 Avant (8D5,B5)		01/94→11/00	8	19	722	306	310	R57	R57	8D0823359, 8D0823359A, 8D0823359B, D0823354
NEW	GS0745	MERCEDES	SLK (R170)		04/96→04/04	8	19	365,5	130	440	R22	R22	1707500036
NEW	GS0746	SKODA	Fabia II		12/06→	8	19	495	205	440	R22	R22	5J6827550B
NEW	GS0746	SKODA	Fabia II		12/06→	8	19	495	205	440	R22	R22	5J6827550B
NEW	GS0747	SKODA	Roomster (5J) Praktik (5J)		09/06→	8	19	420	162	600	R22	R22	5J7827550
NEW	GS0748	MAZDA	6 (GG, GY)		08/02→	8	19	580	201	510	R22	R22	GJ6J62620, GJ6J63620
NEW	GS0749	MAZDA	6 (GG, GY) SW		07/02→2007	8	19	515	190	490	R22	R22	G21B62620A, G21B63620A
NEW	GS0750	VOLVO	XC 70		09/00→08/07	14	28	320	85	1200	R40	R39	30674494
NEW	GS0751	RENAULT	Megane I		10/96→02/99	8	19	165	40	650	R22	R22	7700848464, 7700848404
NEW	GS0752	VW	Transporter IV		05/98→04/03	6	16	285	100	300	R25	R25	7D0 823 359 A
NEW	GS0753	PEUGEOT	107		04/05→	8	19	555	228	305	R22	R22	68950-0H020, 8731.L0
NEW	GS0753	CITROËN	C1		06/05→	8	19	555	228	305	R22	R22	68950-0H020, 8731.L0
NEW	GS0753	TOYOTA	Aygo		07/05→	8	19	555	228	305	R22	R22	68950-0H010, 68950-0H020
NEW	GS0754	BMW	X5 (E53)		05/00→2006	8	19	288	104	640	R25	R25	51238402551
NEW	GS0755	BMW	3 (E90, E91, E92, E93)	(without M3 type)	01/05→	8	19	400	160	330	R25	R28	51237060550
NEW	GS0756	BMW	X5 (E53)		05/00→2006	8	19	530	175	530	R25	R25	51248402405
NEW	GS0757	BMW	1 (E81, E87)		09/04→ 2011	8	19	412	163	400	R25	R22	51247060622, 7060688
NEW	GS0758	BMW	3 Touring (E91)		09/05→	8	19	545	210	450	R22	R22	51247127875
NEW	GS0759	BMW	X3 (E83)		01/04→2010	8	19	625	210	590	R28	R25	51243400379
NEW	GS0760	BMW	3 (E90)		01/05→	8	19	370	110	320	R25	R25	51244365788, 51244394052, 51247060623
NEW	GS0761	BMW	6 (E63)		01/04→	8	19	425	165	350	R25	R22	51247008764
NEW	GS0762	ALFA ROMEO	147 (937)		01/01→2010	8	19	355	120	350	R28	R22	46739202
NEW	GS0762	ALFA ROMEO	GT		11/03→2010	8	19	355	120	350	R28	R22	46739202
NEW	GS0763	ALFA ROMEO	159 (140)		09/05→	8	19	604	253	250	R22	R22	60688574
NEW	GS0763	ALFA ROMEO	159 Sportwagon (140)		03/06→	8	19	604	253	250	R22	R22	60688574
NEW	GS0763	ALFA ROMEO	Brera		01/06→2010	8	19	604	253	250	R22	R22	60688574
NEW	GS0763	ALFA ROMEO	Spider		09/06→2010	8	19	604	253	250	R22	R22	60688574
NEW	GS0764	ALFA ROMEO	159 (140)		09/05→	8	19	291	107	380	R25	R22	60680087
NEW	GS0765	TOYOTA	Avensis (T25)		04/03→2008	8	19	445	183	550	R28	R25	68950-09140, 68950-09150, 68960-09090, 68960-09100, 68950-05060, 68960-05060, 68940-05072, 68960-05072
NEW	GS0766	NISSAN	Pathfinder (R50)		9/97→12/04	8	19	480	173	135	R22	R22	90460-1W301, 90460-6W560

MAGNETI MARELLI

						Ø1 [mm]	Ø2 [mm]	L max	S [mm]	F [N]	A1	A2	O.E.
NEW	GS0767	NISSAN	Note (E11)		03/06→	8	19	590	176	435	R25	R22	90450-9U00A
NEW	GS0768	FIAT	Idea (135, 235)		12/03→	8	19	470	185	480	R28	R25	46830389, 0046830389
NEW	GS0768	LANCIA	Musa (184)		10/04→	8	19	470	185	480	R28	R25	46830389, 0046830389
NEW	GS0769	LANCIA	Ypsilon		10/03→2010	8	19	480	190	420	R28	R22	46817935, 0000046817935
NEW	GS0770	FORD	Mondeo IV Sedan		03/07→	8	19	378	145	540	R23	R23	1496865, 7S71F406A10AF, 1484158
NEW	GS0771	KIA	Sorento (FY/GB/F1/BL)		08/02→2009	8	19	565	240	290	R25	R22	81181-3E000, 81181-3E010, 81181-3E011
NEW	GS0772	KIA	Carnival (FL)		07/02→09/05	8	19	395	158	440	R28	R22	0K53Y-56620, 0K53Y-56630, 0K53Z-56620, 0K53Z-56630, 0K53Z-56620A, 0K53Z-56620B, 0K53Z-56630A, 0K53Z-56630B
NEW	GS0772	KIA	Sedona (FL)		07/02→09/05	8	19	395	158	440	R28	R22	0K53Y-56620, 0K53Y-56630, 0K53Z-56620, 0K53Z-56630, 0K53Z-56620A, 0K53Z-56620B, 0K53Z-56630A, 0K53Z-56630B
NEW	GS0773	KIA	Sorento (FY/GB/F1/BL)		08/02→2009	8	19	545	210	620	R22	R22	81771-3E011, 81771-3E020, 81781-3E011, 81781-3E020
NEW	GS0774	KIA	Picanto (BC/SA)		04/04→2011	8	19	480	195	335	R22	R22	81770-07000, 81780-07000
NEW	GS0775	KIA	Carnival (FL)		07/02→09/05	10	22	736,5	310	725	R22	R22	0K53Y-62620, 0K53Y-63620, 0K53Z-62620, 0K53Z-63620, 0K53Z-62620A, 0K53Z-63620A
NEW	GS0775	KIA	Sedona (FL)		07/02→09/05	10	22	736,5	310	725	R22	R22	0K53Y-62620, 0K53Y-63620, 0K53Z-62620, 0K53Z-63620, 0K53Z-62620A, 0K53Z-63620A
NEW	GS0776	KIA	Magnetis (GD)		05/01→	8	19	299	109	550	R22	R22	81771-3C010
NEW	GS0777	KIA	Carens II (FJ)		07/02→08/06	8	19	515	210	490	R22	R22	0K2FB-62620, 0K2FB-63620, 0K2FB-62620A, 0K2FB-63620A, 0K2FB-62620B, 0K2FB-63620B
NEW	GS0778	KIA	Rio (BN/TC)		03/05→	8	19	490	200	380	R28	R22	81770-1G000, 81780-1G000
NEW	GS0779	KIA	Cerato		03/04→2008	8	19	515	215	400	R22	R22	81770-2F210, 81780-2F210
NEW	GS0780	CHEVROLET	Aveo		03/05→	8	19	386,5	150	350	R22	R28	96540939
NEW	GS0780	CHEVROLET	Kalos		03/05→	8	19	386,5	150	350	R22	R28	96540939
NEW	GS0780	DAEWOO	Kalos (KLAS)		09/02→	8	19	386,5	150	350	R22	R28	96540939
NEW	GS0781	MERCEDES	C (W204) (S204)		01/07→	8	19	650	270	350	R22	R22	2049800064
NEW	GS0782	MERCEDES	Viano (W639)		09/03→	10	22	667	255	755	R22	R22	6399800364
NEW	GS0782	MERCEDES	Vito (W639)		09/03→	10	22	667	255	755	R22	R22	6399800364
NEW	GS0783	MERCEDES	A (W169)		09/04→	8	19	497	200	430	R28	R22	1697400345
NEW	GS0784	MERCEDES	B (W245)		03/05→	10	22	547	220	460	R22	R22	1699800864, 1699800964
NEW	GS0785	MERCEDES	C (S204)		08/07→	8	19	475	175	510	R22	R28	2047400145
NEW	GS0786	OPEL	Astra H, H GTC, H Twin Top		03/04→	8	19	543	220	310	R22	R22	1180405, 24465295

						Ø1 [mm]	Ø2 [mm]	L max	S [mm]	F [N]	A1	A2	O.E.
NEW	GS0787	OPEL	Astra H kombi		08/04→	8	19	474	190	570	R22	R22	132757, 13122695
NEW	GS0788	VAUXHALL	Zafira Mk II		07/05→	10	22	505	205	610	R22	R22	132749, 13128759
NEW	GS0788	OPEL	Zafira B		07/05→2010	10	22	505	205	610	R22	R22	132749, 13128759
NEW	GS0789	KIA	Cee'd (ED)		12/06→	8	19	405	190	480	R25	R25	817801H010, 81780-1H010, 81770-1H010
NEW	GS0789	OPEL	Astra H Twin Top		09/05→	8	19	405	160	480	R25	R25	13243589
NEW	GS0790	RENAULT	Modus (F/JP0)	one piece tailgate	12/04→	8	19	533	200	515	R25	R25	8200219322, 8453460
NEW	GS0791	RENAULT	Clio III (BR0/1, CR0/1)		05/05→	8	19	451	185	385	R25	R25	32062565, 8200299546
NEW	GS0792	VOLVO	C 30		10/06→	8	19	730	316	140	R22	R22	31218478, 9483570
NEW	GS0792	VOLVO	C 70 II		03/06→	8	19	730	316	140	R22	R22	31218478, 9483570
NEW	GS0792	VOLVO	S 40 II		01/04→	8	19	730	316	140	R22	R22	31218478, 9483570
NEW	GS0792	VOLVO	V 50		04/04→	8	19	730	316	140	R22	R22	31218478, 9483570
NEW	GS0793	PEUGEOT	407 (6D)		05/04→10	8	19	320	105	470	R22	R22	8731.K4, 9656592980, 9647261480
NEW	GS0794	PEUGEOT	407 (6E)		05/04→10	8	19	375	145	615	R22	R22	8731.J6, 9647487680
NEW	GS0795	PEUGEOT	407 (6E)	tailgate window	05/04→10	8	19	310	110	400	R22	R22	8731.K5, 9647487880, 9656593180
NEW	GS0796	PEUGEOT	1007		04/05→	8	19	565	215	315	R22	R22	9649587680, 8731.J3
NEW	GS0797	PEUGEOT	207 (WA, WC)		02/06→	8	19	505	211	330	R25	R28	8731.L7
NEW	GS0798	PEUGEOT	207 SW (WK)		06/07→	8	19	505	195	490	R25	R25	8731.P9, 8731.Q0
NEW	GS0799	PEUGEOT	207 SW (WK)	tailgate window	06/07→	6	15	435	180	105	R25	R25	8731.P8
NEW	GS0800	PEUGEOT	308 (4A, 4C)		09/07→	8	19	460	180	F3 440	R25	R25	8731.Q6
NEW	GS0801	VW	Golf V (1K1), Golf V (1K5) Variant		10/03→07/08	8	19	730	320	250	R28	R22	1K0 823 359 A
NEW	GS0801	VW	Jetta III (1K2)		08/05→	8	19	730	320	250	R28	R22	1K0 823 359 A
NEW	GS0802	VW	Caddy III (2KA, 2KH)		03/04→	8	19	404,5	163	460	R25	R22	1T0 823 359, 1T0 823 359 A
NEW	GS0802	VW	Caddy III (2KB, 2KJ)		03/04→	8	19	404,5	163	460	R25	R22	1T0 823 359, 1T0 823 359 A
NEW	GS0802	VW	Caddy Maxi		2008→	8	19	404,5	163	460	R25	R22	1T0 823 359, 1T0 823 359 A
NEW	GS0802	VW	Touran (1T1, 1T2)		02/03→12/06	8	19	404,5	163	460	R25	R22	1T0 823 359, 1T0 823 359 A
NEW	GS0803	AUDI	A6 (4F2), A6 (4F5) Avant		05/04→	8	19	720	300	180	R28	R22	4F0823359, 4F0823359A
NEW	GS0804	VW	Eos		03/06→	8	19	735	321	300	R28	R22	1Q0 823 359
NEW	GS0805	AUDI	Q7 (4L)		03/06→	8	19	485	200	170	R22	R28	4L0823359
NEW	GS0806	AUDI	TT (8J3), TT Roadster (8J9)		10/06→	8	19	315	120	440	R25	R22	8J0823359C
NEW	GS0807	AUDI	A4 B8 (8K2), A4 Avant (8K5)		11/07→	8	19	765	335	340	R22	R22	8T0823359
NEW	GS0807	AUDI	A5 (8T)		06/07→	8	19	765	335	340	R22	R22	8T0 823 359
NEW	GS0809	VW	Touran (1T1, 1T2)		02/03→2010	10	22	505	170	770	R22	R28	1T0 827 550 A, 1T0 827 550 B, 1T0 827 550 C, 1T0 827 550 D, 1T0 827 550 E
NEW	GS0810	AUDI	A6 (4F2)		05/04→	10	22	298	80	730	R22	R22	4F5827552, 4F5827552B
NEW	GS0811	AUDI	A4 (8EC)		11/04→12/07	10	22	298	80	700	R22	R22	8E5827552J, 8E5827552K
NEW	GS0812	AUDI	A6 (4F5) Avant		03/05→	8	19	475	184	650	R22	R28	4F9827552B, 4F9827552C
NEW	GS0813	AUDI	A4 Avant (8ED) B7		11/04→03/08	8	19	490	198	530	R23	R23	8E9827552G, 8E9827552H
NEW	GS0814	VW	Polo IV sedan		09/02→2009	8	19	255	85	600	R25	R22	6Q5 827 550 A, 6Q5 827 550 B
NEW	GS0815	AUDI	A3 Sportwagon		09/04→	8	19	530	210	410	R22	R28	8P4827552B
NEW	GS0816	VW	Caddy III (2KA, 2KH)		03/04→	10	22	720	280	870	R22	R22	2K0 827 550, 2K0 827 550 A

MAGNETI MARELLI

						Ø1 [mm]	Ø2 [mm]	L max	S [mm]	F [N]	A1	A2	O.E.
NEW	GS0816	VW	Caddy III (2KB, 2KJ)		03/04→	10	22	720	280	870	R22	R22	2K0 827 550, 2K0 827 550 A
NEW	GS0816	VW	Caddy Maxi		2008→	10	22	720	280	870	R22	R22	2K0 827 550, 2K0 827 550 A
NEW	GS0817	VW	Jetta III (1K2)		08/05→	10	22	300	70	710	R23	R23	1K5 827 550 C
NEW	GS0818	VW	Eos		03/06→	8	19	500	208	375	R22	R22	1Q0 827 550 A, 1Q0 827 550 B
NEW	GS0819	AUDI	TT (8J3)		10/06→	8	19	470	160	630	R22	R22	8J8827552
NEW	GS0820	VW	Golf V (1K5) Variant		06/07→06/09	8	19	528	212	420	R22	R28	1K9 827 550 A
NEW	GS0821	CITROËN	C4 Picasso	with opening window	02/07→	8	19	640	255	F3 595	R22	R28	9654433580, 8731.P4
NEW	GS0822	CITROËN	C4 Picasso	without opening window	02/07→	8	19	640	255	F3 565	R22	R28	9654433480, 8731.P2
NEW	GS0823	MITSUBISHI	Lancer		09/03→2008	8	19	473	182	540	R22	R22	MR991807, MR991808
NEW	GS0823	MITSUBISHI	Outlander I		05/03→2006	8	19	473	182	540	R22	R22	MR991807, MR991808
NEW	GS0824	HYUNDAI	Sonata V (NF)		01/05→	8	19	726,5	310	360	R28	R22	81161-3K000
NEW	GS0825	HYUNDAI	Getz (TB)		08/02→	8	19	483	191	370	R23	R23	81770-1C000, 81770-1C001
NEW	GS0826	HYUNDAI	Tuscon (JM)		08/04→2010	8	19	515	196	585	R28	R22	81771-2E000
NEW	GS0827	HYUNDAI	Sonata V (NF)		01/05→06/05	8	19	305	105	550	R22	R22	81771-3K000
NEW	GS0828	HYUNDAI	Tuscon (JM)	tailgate window	08/04→2010	8	19	385	150	140	R28	R22	87170-2E020
NEW	GS0829	MAZDA	3 (BK14)		10/03→2009	8	19	540	225	390	R23	R23	BP4K-62-620D, BP4K-63-620D, BP4K-62-620F, BP4K-63-620F
NEW	GS0830	MAZDA	3 (BK12)		10/03→2009	8	19	252	85	425	R22	R22	BN8W-56-930, BN8W-56-930B
NEW	GS0831	MAZDA	2 (B2W)		04/03→2007	8	19	565	220	500	R23	R23	DD10-62-620, DD10-63-620
NEW	GS0832	SAAB	9-3 kabriolet (YS3F)		08/03→	8	19	318	120	380	R25	R25	1012831543, 12831543
NEW	GS0833	SEAT	Leon (1P1)		09/05→	8	19	500	195	340	R25	R22	1P0827550, 1P0827550A
NEW	GS0834	SKODA	Superb (3U4)		02/02→03/08	8	19	721,5	315	350	R22	R22	3U0823359
NEW	GS0835	BMW	X3 (E83)		01/04→2010	10	22	285	100	720	R22	R25	51233400352
NEW	GS0836	FORD	S-MAX		05/06→	8	19	605	242	655	R28	R28	1381555, 1434296, 6M21R406A10AB, 6M21R406A10AD
NEW	GS0837	FORD	Galaxy		05/06→	10	22	574	198	990	R28	R28	1434313, 1405189, 6M21U406A10AB, 6M21U406A10AC
NEW	GS0838	FORD	Mondeo IV Turnier		03/07→	8	19	539	218	585	R23	R28	1477988, 7S71N406A10AD
NEW	GS0839	VAUXHALL	Vectra Mk II GTS	sport type	08/02→2008	8	19	475	195	640	R22	R22	0176608, 09180255, 1 76 608, 13241974, 176608
NEW	GS0839	OPEL	Vectra C GTS	sport type	08/02→2008	8	19	475	195	640	R22	R22	0176608, 09180255, 1 76 608, 13241974, 176608
NEW	GS0840	AUDI	Q7 (4L)	without automatic opening	03/06→	8	19	500	200	525	R23	R28	4L0827552C, 4L0827552F
NEW	GS0841	PEUGEOT	4007		02/07→	8	19	495	197	420	R22	R28	5802A007, 5802A008, 8731.Q1
NEW	GS0841	CITROËN	C-CROSSER		02/07→	8	19	495	197	420	R22	R28	5802A007, 5802A008, 8731.Q1
NEW	GS0841	MITSUBISHI	Outlander II		02/07→	8	19	495	197	420	R22	R28	5802A007, 5802A008, 8731.Q1
NEW	GS0842	TOYOTA	Yaris		11/05→2011	8	19	430	170	370	R22	R22	68950-0D020, 68950-0D021, 68950-0D022, 68960-0D010, 68960-0D011, 68960-0D012
NEW	GS0843	SEAT	Cordoba III (6L2)		09/02→	8	19	285	105	600	R25	R22	6L5827550B
NEW	GS0844	FIAT	Sedici		06/06→	8	19	445	160	420	R22	R22	71743352, 71743353
NEW	GS0844	SUZUKI	SX4		06/06→	8	19	445	160	420	R22	R22	8185079J00, 8186079J00, 8186079J01

						Ø1 [mm]	Ø2 [mm]	L max	S [mm]	F [N]	A1	A2	O.E.
NEW	GS0845	SUZUKI	Ignis II		09/03→2008	8	19	550	235	280	R23	R23	81850-86G-00-000, 81860-86G-00-000, 81850-86G00-X10
NEW	GS0846	NISSAN	Pathfinder (R50)		9/97→12/04	10	22	535	183	710	R22	R25	90450-1W302, 90450-1W312
NEW	GS0847	CITROËN	C4 I Coupe		11/04→2010	8	19	558	235	500	R23	R23	9647295380 8731.K0
NEW	GS0848	CITROËN	Grand C4 Picasso	without opening window	10/06→	8	19	585	190	F3-625	R22	R28	9654438680, 8731.N9
NEW	GS0849	FIAT	Bravo II		11/06→	8	19	510	213	360	R22	R22	51812267
NEW	GS0850	FIAT	500		10/07→	8	19	460	170	350	R25	R25	51785412
NEW	GS0851	FORD	Focus II (DA)		04/05→	8	19	280	90	510	R22	R22	1336159, 1376673, 5M51F406A10AA, 5M51F406A10AB
NEW	GS0852	HONDA	Accord VII CH		12/99→12/02	10	22	550	160	710	R23	R23	74820-S1C-E01, 74820-S1C-E018
NEW	GS0853	PEUGEOT	607 (9D, 9U)		02/00→2010	8	19	554	185	F3 200	R23	R23	7925.16
NEW	GS0854	RENAULT	Megane II (LM0/1)		09/03→2009	8	19	345	122	350	R22	R22	8200119497
NEW	GS0855	SAAB	9-3 (YS3F)		09/02→	8	19	740	310	290	R28	R25	127850021, 12785021
NEW	GS0856	VW	New Beetle (1Y7)		09/02→	8	19	201	52	250	R25	R22	1Y0 827 550 B, 1Y0 827 550 D, 1Y0 827 550 F
NEW	GS0857	VW	Golf V Plus (5M1)		01/05→	8	19	480	200	550	R22	R28	5M0 827 550, 5M0 827 550A
NEW	GS0858	VW	Touareg (7LA)	tailgate window	10/02→05/10	8	19	315	100	550	R25	R25	7L6 845 587, 7L6 845 587A
NEW	GS0859	CHEVROLET	Lacetti		03/05→	8	19	462,5	190	560	R23	R23	96548931
NEW	GS0859	DAEWOO	Lacetti		03/05→	8	19	462,5	190	560	R23	R23	96548931
NEW	GS0860	FIAT	Croma (194)		06/05→	8	19	628	272	440	R22	R22	51734960, 0000051734960
NEW	GS0861	VW	Fox (5Z1)		10/03→	8	19	463	185	360	R25	R22	5Z6 827 550 B
NEW	GS0862	FORD	Mondeo IV		03/07→	10	22	556	224	715	R23	R23	1484371, 7S71A406A10BA
NEW	GS0863	MERCEDES	SLK (R171)	L	03/04→	8	19	674	293	300	R22	R22	1718800129
NEW	GS0864	MERCEDES	SLK (R171)	R	03/04→	8	19	674	293	330	R22	R22	1719800164
NEW	GS0865	MERCEDES	SL (R230)	up to chassis no. F 122820	10/01→2006	8	19	333	117	650	R22	R22	2307500036
NEW	GS0866	MERCEDES	SL (R230)	from chassis no. F 109966 without remote	10/01→2006	8	19	415	160	530	R22	R22	2309800164
NEW	GS0867	MERCEDES	SL (R230)	from chassis no. F 109966 with remote controlled clock	10/01→2006	8	19	418	163	490	R22	R22	2309800264
NEW	GS0868	PORSCHE	Boxster (987)		11/04→	8	19	240	70	380	R25	R25	99751155101
NEW	GS0868	PORSCHE	Cayman		07/06→	8	19	240	70	380	R25	R25	99751155101
NEW	GS0868	PORSCHE	911 (997) Carrera		07/04→2011	8	19	240	70	380	R25	R25	99751155101
NEW	GS0868	PORSCHE	Boxster (987)		07/04→2011	8	19	240	70	380	R25	R25	99751155101
NEW	GS0869	PORSCHE	911 (997) Carrera		07/04→2011	8	19	314,5	116	330	R22	R22	99751255100
NEW	GS0870	OPEL	Astra H GTC	3 sport type	03/05→	8	19	479	179	340	R28	R22	132532, 13220159
NEW	GS0871	MERCEDES	M (W164)	without remote controlled clock	07/05→	10	22	560	178	725	R22	R28	1647400145, 1647400245
NEW	GS0872	OPEL	Corsa D	5	07/06→	8	19	609,5	251,5	245	R22	R22	176413, 13182309
NEW	GS0872	VAUXHALL	Corsa Mk III	5	07/06→	8	19	609,5	251,5	245	R22	R22	176413, 13182309
NEW	GS0873	MERCEDES	CLK (A209)		02/03→2009	8	19	256	58	560	R25	R25	2099800064, 2099800364, 2099800464, 2099800564
NEW	GS0874	NISSAN	X-Trail (T30)	L	06/01→03/07	8	19	536	204	410	R25	R25	90450-EQ30A, 90450-EQ31A, 90450-EQ325, 90450-EQ300, 90451-EQ30A, 90451-EQ31A, 90450-EQ325, 90450-EQ301

MAGNETI MARELLI

	MAGNETI MARELLI					L max							O.E.
						Ø1 [mm]	Ø2 [mm]	L max	S [mm]	F [N]	A1	A2	
NEW	GS0875	MAZDA	MX-5 III (MC)		03/05→	8	19	238	62	165	R22	R22	NF79-56-930B, NF80-56-930B
NEW	GS0876	MERCEDES	SL (R230)		10/01→2006	8	19	323	103	700	R22	R22	2308800029
NEW	GS0877	RENAULT	Megane II Grandtour (KM0/1)	tailgate window	08/03→2006	8	19	520	208	130	R22	R22	8200135264
NEW	GS0878	SMART	Roadster		04/03→	8	19	299	110	240	R25	R25	000 922 3V0 05, 000 922 3V, Q0009223V003000000
NEW	GS0878	MERCEDES	S (W221)		10/05→	6	15	297	113	240	R25	R25	2217500236, 2217500216
NEW	GS0879	HYUNDAI	Coupe (GK)		09/01→2008	8	19	447	175	300	R22	R22	81161-2C000
NEW	GS0880	ROVER	Streetwise		08/03→04/05	8	19	600	228	360	R22	R22	BHE450030
NEW	GS0881	HYUNDAI	Trajet (FO)		03/00→	10	22	570	240	650	R23	R23	8177-13-A00, 81771-3A001
NEW	GS0882	VAUXHALL	Signum		05/03→2008	10	22	482	185,5	700	R28	R22	176609, 9180256, 13191401, 13247868
NEW	GS0882	OPEL	Signum		05/03→2008	10	22	482	185,5	700	R28	R22	176609, 9180256, 13191401, 13247868
NEW	GS0883	MERCEDES	SLK (R171)		03/04→	8	19	282	98	560	R22	R22	1717500036
NEW	GS0884	SUBARU	Impreza (GD, GG)		12/00→2007	8	19	568	233	330	R22	R22	63269FE000
NEW	GS0885	SUBARU	Impreza (GF)		08/92→12/00	8	19	613	260	300	R22	R22	60315FA010, 60335FA100, 60335FA120, 60335FA000
NEW	GS0886	TOYOTA	Yaris (SP90)		04/99→2005	8	19	500	203	245	R25	R22	68950-09110, 68960-09120
NEW	GS0887	CITROËN	C6		09/05→	8	19	580	245	165	R25	R25	7925 20
NEW	GS0888	KIA	Sorento (FY/GB/F1/BL)	tailgate window	08/02→2009	6	15	362	138	100	R25	R25	87170-3E000, 87170-3E010, 87180-3E000, 87180-3E010
NEW	GS0889	CITROËN	C4 Coupe		11/04→	8	19	558	235	530	R25	R25	9650854180, 8731.J9
NEW	GS0890	OPEL	Frontera B	spare tyre bracket	10/98→2003	8	19	500	230	135	R25	R25	
NEW	GS0890	VAUXHALL	Frontera Mk II	spare tyre bracket	10/98→2003	8	19	500	230	135	R25	R25	
NEW	GS0891	RENAULT	Megane Grand Scenic II	without opening window	06/03→	8	19	520	180	F3-625	R22	R22	8200174571, 8200377199, 8489348
NEW	GS0891	RENAULT	Megane Scenic II (JH)	without opening window	06/03→2009	8	19	520	180	F3-625	R23	R23	8200174571, 8200377199, 8489348
NEW	GS0892	OPEL	Corsa D	3	07/06→	8	19	603	255	240	R22	R22	176414, 13182537
NEW	GS0892	VAUXHALL	Corsa Mk III	3	07/06→	8	19	603	255	240	R22	R22	176414, 13182537
NEW	GS0893	RENAULT	Megane II Grandtour (KM0/1)	with opening window	08/03→2006	8	19	547	220	550	R22	R28	8200212598
NEW	GS0894	VW	Passat VI (3C2)(3C5)		03/05→	8	19	730	310	380	R28	R22	3C0 823 359, 3C0 823 359 A
NEW	GS0895	VW	Passat VI (3C2)		03/05→	8	19	375	140	390	R22	R28	3C5 827 550 A, 3C5 827 550 B, 3C5 827 550 C
NEW	GS0896	VW	Passat VI Variant (3C5)		08/05→	8	19	450	180	550	R22	R25	3C9 827 550, 3C9 827 550A
NEW	GS0897	VW	Transporter T5	modele Caravelle, Multivan	04/03→	8	19	390	155	360	R22	R28	7H0823359A, 7H0823359B, 7H0823359C
NEW	GS0898	OPEL	Kadett E	to Vet.- J2502492 -JE100000	09/84→08/87	10	22	699	257	610	R40	R39	90159629, 132706
NEW	GS0899	VAUXHALL	Astra Caravan Mk II	to Vet.- J2502492 -JE100000	09/84→08/87	10	22	699	257	540	R40	R39	90196023, 132734
NEW	GS0899	OPEL	Kadett E	to Vet.- J2502492 -JE100000	09/84→08/87	10	22	699	257	540	R40	R39	90196023, 132734
NEW	GS0900	HONDA	Civic VII		09/05→	8	19	639	258	465	R23	R23	74820-SMG-E01, 74820-SMG-E02, 74820-SMG-E010C1, 74820-SMG-E021-M1
NEW	GS0901	NISSAN	Kubistar (X76)		08/03→	8	19	690	300	630	R23	R23	77 00 303 186, 77 00 308 167, 8465124
NEW	GS0902	VW	Tiguan		09/07→	8	19	494	172	500	R28	R28	5N0 827 550 A
NEW	GS0903	KIA	Cee'd		09/07→	10	22	390	148	800	R22	R41	81770-1H510, 81780-1H510

	MAGNETI MARELLI					L max							O.E.
						Ø1 [mm]	Ø2 [mm]	L max	S [mm]	F [N]	A1	A2	
NEW	GS0904	SMART	Roadster		04/03→2006	8	19	435	175	170	R25	R25	Q0009235V004000000, Q0009235V005000000
NEW	GS0905	MAZDA	323 VI (BJ)	L	09/98→05/04	10	22	587	230	340	R25	R58	B28C63620C
NEW	GS0906	MAZDA	323 VI (BJ)	R	09/98→05/04	10	22	587	230	340	R25	R59	B28C-62-620B
NEW	GS0907	AUDI	A4 (8H7, 8HE)		07/02→12/05	8	19	310	110	590	R22	R22	8H0 827 552B
NEW	GS1045	AUDI	TT Roadster (8J9)		02/07→	8	19	331	115	520	R22	R22	8J7 827 552
NEW	GS0908	SEAT	Altea XL (5P5, 5P8)		10/06→	8	19	419	165	510	R22	R22	5P8 827 550
NEW	GS0909	AUDI	A3		04/08→	8	19	255	78	350	R25	R50	8P7 827 552 C, 8P7 827 552 D, 8P7 827 552 F
NEW	GS0911	MAZDA	626 V (GF)	R	05/97→10/02	10	22	610	240	570	R49	R54	GE4V-62-620D
NEW	GS0912	MAZDA	626 V (GF)	L	05/97→10/02	10	22	610	240	570	R48	R53	GE4V-63-620D
NEW	GS0913	RENAULT	Megane III Grandtour (KZ0/1)		11/08→	8	19	482,5	200	705	R22	R22	844300009R
NEW	GS0914	HYUNDAI	ix55		09/08→	8	19	557	220	580	R22	R22	81770-3J000
NEW	GS0915	OPEL	Insignia		07/08→	8	19	500	146	660	R22	R22	176105, 13246577, 176 124
NEW	GS0915	VAUXHALL	Insignia		07/08→	8	19	500	146	660	R22	R22	13332570, 13246577, 13321298
NEW	GS0916	SEAT	Ibiza V Sportcoupe (6J1)		07/08→	8	19	452	144	455	R25	R28	6J3 827 550
NEW	GS0917	SEAT	Ibiza V (6J5)		03/08→	8	19	559	230	290	R25	R28	6J4 827 550, 6J4 827 550 B
NEW	GS0918	PEUGEOT	207 CC (WD)		02/07→	8	19	631	265	455	R25	R25	8731 S7
NEW	GS0919	HYUNDAI	ix55		09/08→	8	19	436	154	245	R28	R22	81160-3J000
NEW	GS0920	SKODA	Superb (3T4)		03/08→	8	19	404,5	160	310	R25	R25	3T5 827 552
NEW	GS0921	CITROËN	Nemo		02/08→	8	19	600	225	670	R22	R22	8731.V0
NEW	GS0921	FIAT	Fiorino, Qubo		02/08→	8	19	600	225	670	R22	R22	1354844080
NEW	GS0921	PEUGEOT	Bipper (AA) , Tepee		02/08→	8	19	600	225	670	R22	R22	8731.VO
NEW	GS0922	HYUNDAI	H-1		01/07→	10	22	595	205	680	R22	R41	81780-4H030, 81770-4H030
NEW	GS0923	SAAB	9-3		03/05→	14	28	399	86	1340	R47	R47	12 797 509, 12 778 556
NEW	GS0924	BMW	7 (E32)		09/86→06/94	8	19	254	95	490	R46	R46	51241908431
NEW	GS0925	RENAULT	Twingo (CN0)		03/07→	8	19	383	137	455	R25	R25	82 00 385 560
NEW	GS0926	DACIA	Logan MCV (KS)		02/07→	8	19	519	184	370	R22	R22	82 00 735 264
NEW	GS0926	DACIA	Sandero		06/08→	8	19	519	184	370	R22	R22	82 00 735 264
NEW	GS0927	RENAULT	Megane II (EMO/1)		04/08→	8	19	446	170	490	R22	R22	7701057303,E84827465A
NEW	GS0928	AUDI	A4 Avant (8K5) B8		04/08→	8	19	502	205	530	R22	R22	8K9 827 552
NEW	GS0929	SMART	Forfour		01/04→06/06	8	19	532,5	190	360	R22	R22	A4547400145
NEW	GS0930	BMW	Z3		10/95→01/03	8	19	214	62	680	R25	R25	51 24 8 399 087
NEW	GS0931	VOLVO	740 (744)		09/85→08/92	6	15	365,5	150	290	R43	R44	1334648
NEW	GS0932	LAND ROVER	Discovery III (TAA)		07/04→	8	19	480	185	480	R25	R25	BHE780012, 5H22406A10BA, 32031392
NEW	GS0933	AUDI	TT Roadster (8N9)		10/99→06/06	8	19	402,5	160	150	R22	R22	8N7 827 552 C, 8N7827552A
NEW	GS0934	BMW	Z4 (E85)		02/03→2008	8	19	296	95	250	R25	R25	51 24 7 016 186
NEW	GS0935	LAND ROVER	Range Rover III (LM)		03/02→	8	19	516,5	150	580	R25	R25	BHE760020, XH42406A10AA, 32028398
NEW	GS0936	VOLVO	S70 (P80)		01/97→11/00	8	19	496,5	195	340	R43	R22	9159604,9159605,9187795,9187796,9485546,9485547
NEW	GS0937	AUDI	Q5 (8R)		11/08→	8	19	500	190	500	R28	R28	8R0 827 552 A

MAGNETI MARELLI

													O.E.
						L max A1 A2 Ø1 Ø2	Ø1 [mm]	Ø2 [mm]	L max	S [mm]	F [N]	A1	A2	
NEW	GS0938	ALFA ROMEO	GT		11/03→2010	8	19	400	139	400	R25	R25	50508060
NEW	GS0939	OPEL	Antara		05/06→	8	19	585,5	235	510	R23	R23	96830123,96661403,4809275
NEW	GS0940	JEEP	Grand Cherokee II (WJ,WG)		10/98→09/04	8	19	285	105	460	R22	R22	55136764AA, 55352896AB, 55352897AB
NEW	GS0941	SAAB	9-3		09/02→	8	19	739	300	290	R28	R25	12785021
NEW	GS0942	LAND ROVER	Discovery III (TAA)		07/04→	6	15	400	160	230	R25	R25	BKK780010, 5H2216E610AA, 32030483
NEW	GS0942	LAND ROVER	Range Rover Sport (LS)		02/05→	6	15	400	160	230	R25	R25	BKK780010, 5H2216E610AA, 32030482
NEW	GS0943	BMW	Z4 (E85)		02/03→2008	8	19	672	240	180	R25	R22	51 23 7 016 178
NEW	GS0944	LAND ROVER	Range Rover III (LM)		03/02→	8	19	292	88	410	R25	R25	BKK760010,XH4216E610AA
NEW	GS0945	AUDI	Q5 (8R)		11/08→	8	19	305	96	410	R25	R25	8R0 823 359 A
NEW	GS0946	ALFA ROMEO	159 Sportwagon		03/06→	10	22	250	72	1180	R47	R47	50508010,60683933
NEW	GS0947	LAND ROVER	Freelander 2 (FA)		10/06→	8	19	538	220	510	R25	R25	LR002104, 6H52406A10AF
NEW	GS0948	LAND ROVER	Freelander 2 (FA)		10/06→	8	19	319,5	120	410	R22	R22	LR001773, 6H5216C826BD
NEW	GS0949	HONDA	Jazz II (GD)		03/02→07/08	10	22	414	155	500	R23	R23	04741-SAA-000
NEW	GS0950	HONDA	CR-V II (RD)	rear window	03/02→09/06	8	19	355	135	115	R22	R25	74820SCA003, 74820SCA0031
NEW	GS0951	HONDA	CR-V III		10/06→	10	22	628	184	510	R22	R28	74870-SWA-A01, 74820-SWA-A01
NEW	GS0952	HYUNDAI	i30		10/07→	8	19	569	240	310	R22	R28	817712R000, 817812R000, 81771 1Z000
NEW	GS0953	HYUNDAI	Atos Prime (MX)		06/03→	8	19	449	160	470	R22	R25	81770-06010, 81770-06011
NEW	GS0954	KIA	Sportage (JE)		09/04→2010	8	19	567	195	550	R25	R22	OK01H-62-610E
NEW	GS0955	NISSAN	Micra (K11)		1992→2002	8	19	549	219	290	R22	R22	90450-4F111, 90450-4F110
NEW	GS0956	NISSAN	Qashqai (J10,JJ10)		02/07→	8	19	515	210	365	R25	R25	90450-JD01B
NEW	GS0957	TOYOTA	Corolla Compact (E11)		04/97→01/02	8	19	495	180,5	510	R25	R25	68960-02010, 68950-02020, 68960-09060, 68950-09090
NEW	GS0957	TOYOTA	Corolla hatchback (E11)		04/97→01/02	8	19	495	180,5	510	R25	R25	68960-02010, 68950-02020, 68960-09060, 68950-09090
NEW	GS0958	TOYOTA	Corolla Liftback (E11)		04/97→01/02	8	19	496	180	570	R25	R25	68950-09100, 68960-02020, 68950-02030
NEW	GS0958	CITROËN	C5 (RC)		09/04→	10	22	494	175	570	R25	R50	8731.K2, 8731 K1
NEW	GS0958	TOYOTA	Corolla Compact (E11)		04/97→01/02	8	19	495	180,5	510	R25	R25	68960-02010, 68950-02020, 68960-09060, 68950-09090
NEW	GS0958	TOYOTA	Corolla hatchback (E11)		04/97→01/02	8	19	495	180,5	510	R25	R25	68960-02010, 68950-02020, 68960-09060, 68950-09090
NEW	GS0959	TOYOTA	Prius		08/03→2009	8	19	493	195	445	R25	R25	68950-0W251, 68960-0W240
NEW	GS0960	VOLVO	780		08/86→07/90	6	15	359	150	180	R43	R44	1376115, 180084
NEW	GS0961	ALFA ROMEO	Spider (939)		09/06→	8	19	270	82	380	R25	R25	60694168
NEW	GS0962	ALFA ROMEO	GTV (916C)		06/95→04/05	8	19	393	150	170	R22	R22	60594694, 60594694
NEW	GS0962	ALFA ROMEO	Spider (916S)		06/95→04/05	8	19	393	150	170	R22	R22	60594694, 60594694
NEW	GS0963	BMW	6 (E63)		01/04→	8	19	291	65	540	R25	R25	51 23 7 070 670
NEW	GS0963	BMW	6 (E64)		04/04→	8	19	291	65	540	R25	R25	51 23 7 070 670
NEW	GS0964	FORD	Street KA		05/03→07/05	8	19	201	60	450	R25	R25	1225361, 3S51B406A10-AA
NEW	GS0965	CITROËN	C4 Grand Picasso (UA)	rear window (7 seats)	10/06→	8	19	589	240	110	R25	R25	96 544 388 80, 8731.N8
NEW	GS0966	SUBARU	Justy IV		01/07→	8	19	414	160	410	R23	R23	68950B1031, 68960B1031,

						Ø1 [mm]	Ø2 [mm]	L max	S [mm]	F [N]	A1	A2	O.E.
NEW	GS0966	DAIHATSU	Sirion II (M3)		05→10	8	19	414	160	410	R23	R23	68950B1031, 68960B1031
NEW	GS0967	CITROËN	C6 (TD)		09/05→	8	19	387	139	465	R25	R25	8731.K8, 96.618.151.80
NEW	GS0968	ALFA ROMEO	164 (164)		06/87→09/98	8	19	615	243	240	R2	R35	60558222, 605582220
NEW	GS0969	FORD	Focus II		10/06→	8	19	490	189	560	R22	R22	1453743, 9410495, 6N41L406A10AA,
NEW	GS0970	MERCEDES	CLK (A208)		03/98→03/02	8	19	222,5	71	500	R22	R22	208 750 00 36, 208 750 03 36
NEW	GS0971	MERCEDES	SL (R129)		03/89→10/01	6	15	242	74	325	R25	R46	A 129 980 06 64
NEW	GS0972	SUZUKI	Vitara (ET, TA)		07/88→03/98	8	19	587	235	100	R60	R60	8185185C00
NEW	GS0973	MERCEDES	S (W220)		10/98→08/05	8	19	397	158	295	R25	R45	2207500136
NEW	GS0974	PORSCHE	911(993,964)		07/89→09/97	8	19	305	105	370	R25	R35	99351133100
NEW	GS0975	PORSCHE	Cayenne (955)	tailgate's window	09/02→	8	19	227	57	790	R22	R51	95551252800, 7L5 845 587 B
NEW	GS0976	PORSCHE	Cayenne (955)		09/02→	8	19	585	246	260	R22	R28	95551135900, 7L5 823 359
NEW	GS0977	AUDI	Cabriolet(8G7,B4)		11/92→08/00	8	19	274	90	740	R22	R23	8G0 827 552 C, 8GO 827 552 B
NEW	GS0978	MITSUBISHI	Space Wagon (N5 W)		10/98→	10	22	500	175	630	R23	R23	MR415173, MR415174
NEW	GS0979	MERCEDES	SLK (R170)		09/96→04/04	10	22	874	404	260	R22	R52	170 880 02 29
NEW	GS0980	MERCEDES	M (W164)	R	07/05→	8	19	570	254	330	R28	R52	164 880 01 29
NEW	GS0981	MERCEDES	M(W164)	L	07/05→	8	19	533	216	330	R28	R52	164 880 00 29
NEW	GS0982	MERCEDES	R (W251,V251) L		01/06→	8	19	394	149	400	R22	R52	2518800129
NEW	GS0983	MERCEDES	R (W251,V251)R		01/06→	8	19	453	138	400	R22	R52	2518800229
NEW	GS0984	MERCEDES	S (W221)		12/05→	8	22	301	92	730	R22	R52	2218800329
NEW	GS0985	HYUNDAI	Santa Fe (CM)		03/06→	8	19	452	170	660	R22	R28	817702B001
NEW	GS0986	NISSAN	Sunny III traveller (Y10)		06/91→03/00	10	22	600	220	325	R25	R25	9045073R00
NEW	GS0987	OPEL	Insignia Sports Tourer R	without automatic opening	07/08→	8	30	652	218	750	R22	R22	176676, 13247949
NEW	GS0987	VAUXHALL	Insignia Sports Tourer R	without automatic opening	07/08→	8	30	652	218	750	R22	R22	176676, 13247949
NEW	GS0988	OPEL	Insignia Sports Tourer R	with automatic opening	07/08→	10	22	661	260	800	R22	R22	132020, 13332885, 13278257, 176541
NEW	GS0988	VAUXHALL	Insignia Sports Tourer R	with automatic opening	07/08→	10	22	661	260	800	R22	R22	132020, 13332885, 13278257, 176541
NEW	GS0989	FIAT	Punto (176C)		04/94→06/00	8	19	565	200	200	R25	R25	46720558, 46720558P5
NEW	GS0990	FIAT	Punto (176C)		04/94→06/00	6	15	155	40	400	R23	R23	46730681, 46730681C3
NEW	GS0991	FORD	Escort (V, VI, VII)		07/90→08/00	8	19	285	104	230	R22	R22	1666591, V91 AB L406A10 AB
NEW	GS0992	FORD	Escort (V, VI, VII)		07/90→08/00	8	19	431	100	400	R22	R22	V91AB L50600 AA
NEW	GS0993	OPEL	Combo Tour		06/01→2011	10	22	598	186	700	R22	R25	5132267, 91163328
NEW	GS0994	OPEL	Astra F (53 B)		01/91→09/98	8	19	283	87	400	R25	R25	90486893, 176604
NEW	GS0994	VAUXHALL	Astra Mk III (F)		01/91→09/98	8	19	283	87	400	R25	R25	90486893, 176604
NEW	GS0995	OPEL	Antara		05/06→	8	19	431	173	320	R22	R22	96664104, 4808912
NEW	GS0996	CHEVROLET	Captiva (C100,C140)		06/06→	8	19	427	165	240	R22	R22	96830124
NEW	GS0997	CHEVROLET	Captiva (C100,C140)		06/06→	8	19	585	246	500	R25	R25	96830123, 96984466
NEW	GS0998	MERCEDES	E Cabrio (A124)		06/93→03/98	6	15	289	113	350	R25	R46	A 124 750 00 36
NEW	GS0999	PORSCHE	Boxster (986)		09/96→2004	6	15	195,5	60	350	R25	R25	99651155101, 986 512 551 01
NEW	GS1000	PORSCHE	911 (996), Boxster (986)		09/97→08/05	8	19	225	60	560	R25	R25	996 511 551 01
NEW	GS1001	TOYOTA	Carina E (T19)		04/92→09/97	8	19	611	228	420	R23	R23	68950-05010, 68950-05020
NEW	GS1002	MAZDA	6 (GG)		06/02→	8	19	287	89	450	R22	R41	GJ6A 56 930, GJ6E 56 930

MAGNETI MARELLI

						Ø1 [mm]	Ø2 [mm]	L max	S [mm]	F [N]	A1	A2	O.E.
NEW	GS1003	HYUNDAI	Accent II (LC)		01/00→	8	19	577	190	530	R25	R51	81780-25210, 81770-25220, 81780-25220
NEW	GS1004	MERCEDES	R (W251,V251)		01/06→	10	22	312,5	75,5	1450	R23	R23	251 740 00 45
NEW	GS1005	MERCEDES	E T-model (S211)	with automatic opening	03/03→	10	22	347,5	91,5	1300	R23	R23	2119800464, A 2119800464, 211 980 03 64
NEW	GS1006	PORSCHE	Boxster (987)		11/04→2011	8	19	195,5	36	500	R25	R25	987.512.551.01, 987.512.551.05
NEW	GS1007	LEXUS	GS (GWS,GRS,UZS)		04/05→2012	8	19	314	92	485	R25	R50	645300W091, 64530-0W090
NEW	GS1008	LEXUS	GS (GWS,GRS,UZS)		04/05→2012	8	19	516	184	160	R25	R25	53450→0W071, 53440-0W091, 53440-0W090, 53450-0W070
NEW	GS1009	LEXUS	IS II (XE2,SE2)		10/05→	8	19	456	182	185	R25	R25	53450→0W080, 53440→0W100, 53440→0W101, 53450→0W081
NEW	GS1009	LEXUS	IS I (GXE10)		04/99→2005	8	19	456	182	185	R25	R25	53450→0W080, 53440→0W100, 53440→0W101, 53450→0W081
NEW	GS1010	HYUNDAI	XG (XG)		12/98→05	8	19	345	119	510	R22	R51	81771-38500, 81771-39501
NEW	GS1011	SMART	Fortwo Coupe		01/07→	8	19	445	176	90	R25	R50	A4519880004
NEW	GS1012	AUDI	A8 (4E)		10/02→07/10	8	19	375	144	280	R22	R51	4E0 823 359 C
NEW	GS1013	AUDI	A8 (4E)	with automatic opening, left side	08/03→04/10	8	19	408	152	390	R22	R51	4 E0 827 551 B, 4E0 827 551 C
NEW	GS1014	AUDI	A8 (4E)	with automatic opening, right side	08/03→04/10	8	19	408	152	265	R22	R51	4E0 827 552 B, 4E0 827 552 C
NEW	GS1015	AUDI	Q7(4L)	without automatic opening	03/06→	10	22	498	191	630	R28	R28	4LO 827 552 E, 4E0 827 551 A
NEW	GS1016	PORSCHE	Cayman		11/05→	8	19	632,5	216	550	R25	R50	987 512 551 03, 987 512 551 04, 987 512 551 06, 987 512 551 07
NEW	GS1017	FIAT	Linea		06/07→	8	19	288,5	100	380	R25	R50	51801718
NEW	GS1018	CITROËN	Berlingo II	with equipment for orga no.11829	04/08→	8	19	543	220	200	R22	R22	8731.R9, 8731.V6
NEW	GS1018	PEUGEOT	Partner Tepee II	with equipment for orga no.11829	04/08→	8	19	543	220	200	R22	R22	8731.V6
NEW	GS1019	CITROËN	Berlingo II	with equipment from orga no.118230	04/08→	8	19	563	235	140	R25	R50	8731.R8
NEW	GS1019	PEUGEOT	Partner Tepee II	with equipment from orga no.118230	04/08→	8	19	563	235	140	R25	R50	8731.R8
NEW	GS1020	CITROËN	C4		07/06→	8	19	313,5	78,5	495	R22	R51	8731.L9
NEW	GS1021	BMW	7(F01,F02,F03,F04)		10/08→	8	19	278	70	470	R22	R51	51 237 185 032
NEW	GS1022	MINI	Mini / Clubman / Cabrio (R55,R56,R57)		10/06→	8	19	241	76	700	R22	R51	51 23 7 148 864, 4162 6801 258
NEW	GS1023	ALFA ROMEO	GTV/Spider (916C,916S)		05/98→04/05	8	19	669	186	200	R22	R22	60689182, 60577413, 60594694
NEW	GS1024	MG	ZT, ZT-Tourer		01→05	8	19	338	119	420	R22	R22	BKK500010
NEW	GS1025	ROVER	75 (RJ), 75 Tourer (RJ)		02/99→	8	19	338	119	420	R22	R22	BKK500010
NEW	GS1026	DAEWOO	Matiz M200		2005→	8	19	406	162	335	R25	R22	96601844
NEW	GS1027	DAEWOO	Nubira Wagon (KLAN)		07/03→	8	19	449	179	520	R25	R25	96306833, 96557538
NEW	GS1027	CHEVROLET	Nubira Kombi		01/05→	8	19	449	179	520	R25	R25	96306833, 96557538
NEW	GS1028	HONDA	Accord Tourer	without automatic opening	07/08→	10	22	524	212	540	R22	R28	74820TL4G01
NEW	GS1029	HONDA	Accord Tourer	without automatic opening	07/08→	10	22	524	212	585	R22	R28	74820TL4G31
NEW	GS1030	KIA	Carens III (UN)W		09/06→	10	22	569,5	155	590	R22	R25	81770-1D010, 81780-1D010

						Ø1 [mm]	Ø2 [mm]	L max	S [mm]	F [N]	A1	A2	O.E.
NEW	GS1031	MAZDA	RX-8 (SE17)		10/03→	8	19	232,5	65	305	R22	R22	FE1556930C
NEW	GS1032	MERCEDES	CLC		05/08→	8	19	604	225	510	R22	R22	2039800764
NEW	GS1033	MITSUBISHI	Pajero Sport (K90)		1996→2008	10	22	468	180	610	R38	R38	MR526933
NEW	GS1034	OPEL	Agila (H00)		02→07	8	19	643	204	475	R25	R25	4708557, 93193386, 81860→83E10→X10, 81860→84E00
NEW	GS1034	SUZUKI	Wagon R+ (MM)		02→07	8	19	643	204	475	R25	R25	4705436, 4705437
NEW	GS1035	RENAULT	Kangoo II		02/08→	8	19	833	300	560	R37	R37	8200497806
NEW	GS1036	RENAULT	Koleos (HY)		09/08→	8	19	585	250	430	R22	R22	904513981R, 904505599R
NEW	GS1037	RENAULT	Modus		12/04→	10	22	533	220	750	R22	R41	82 00 219 323, 82 00 461 349
NEW	GS1038	ROVER	200(XW)		01/92→11/99	8	19	274	95	320	R25	R25	BMH38003, BMH38004
NEW	GS1039	SUZUKI	Swift III (SG)		02/05→10	8	19	439,5	155	410	R22	R22	81850-62J00, 81800-63811, 81801-62811-000
NEW	GS1040	TOYOTA	Auris (ZE15, RE15)		10/06→	8	19	443,5	165	455	R25	R25	68960-02081, 68950-02091
NEW	GS1041	VOLVO	V70 III	without automatic opening	08/07→	10	22	308	88	1190	R23	R23	30674836, 31217640
NEW	GS1041	VOLVO	XC70 III	without automatic opening	08/07→	10	22	308	88	1190	R23	R23	30674836, 31217640
NEW	GS1042	VOLVO	XC70 III	with automatic opening	08/07→	8	19	299,5	88	370	R23	R23	31335795
NEW	GS1042	VOLVO	V70 III	with automatic opening	08/07→	8	19	299,5	88	370	R23	R23	31335795
NEW	GS1043	FIAT	Coupe (FA175)	R	11/93→08/00	8	19	673	276	250	R38	R38	46304290

MAGNETI MARELLI

Informazione tecnica
Technical information
I`information technique
Technische Information
Información técnica
Informação técnica
Τεχνικές πληροφορίες
Informacja techniczna
Техническая информация
Teknik Bilgi

R1	R2
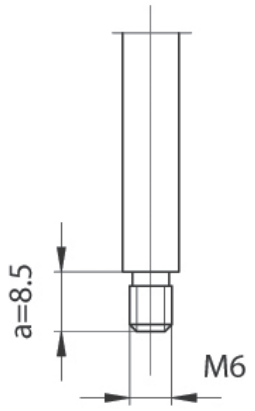	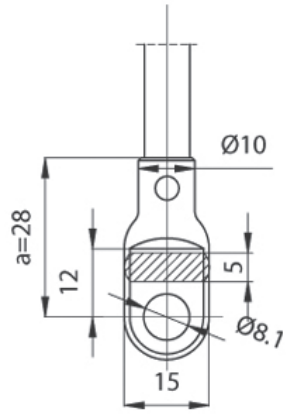
R3	**R4**
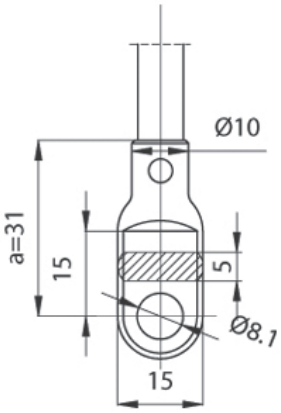	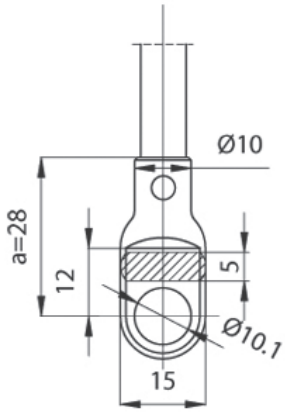
R5	**R6**
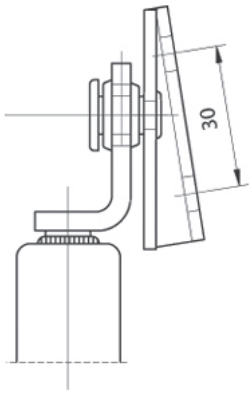	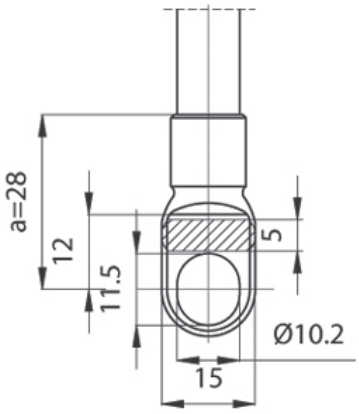
R7	**R8**
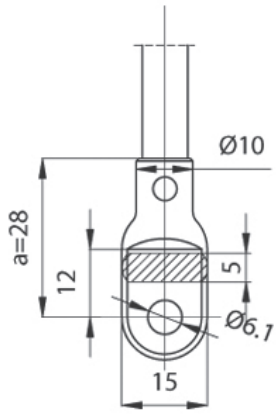	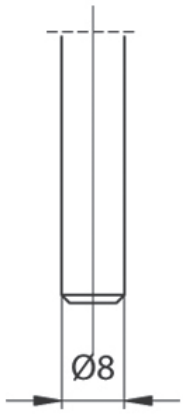

R9

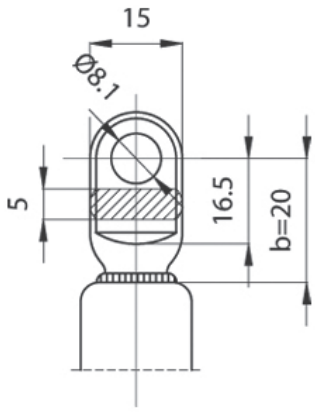

R10

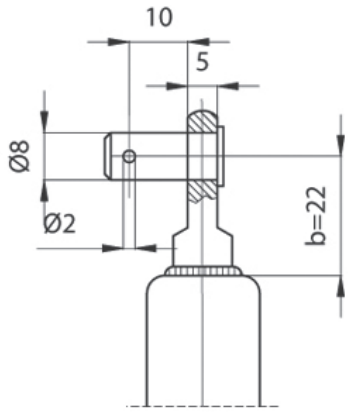

R11

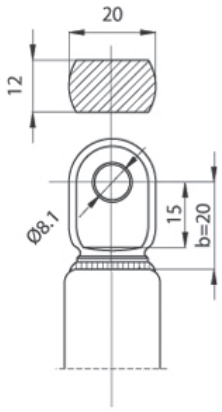

R12

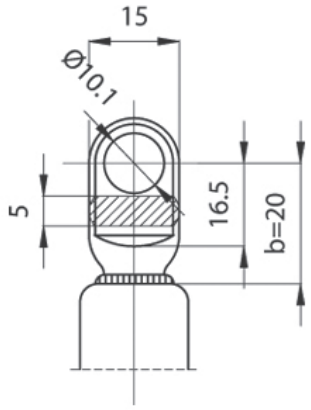

R13

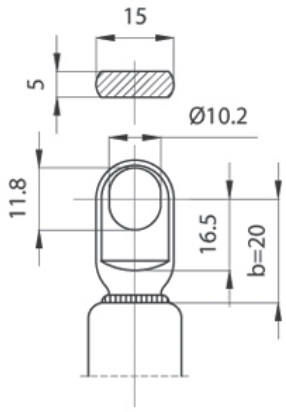

R14

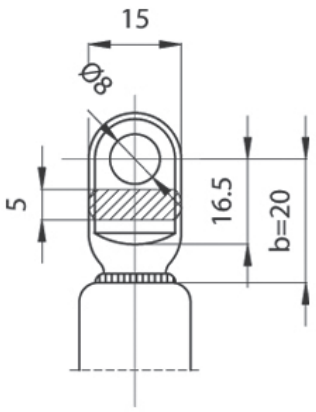

R15

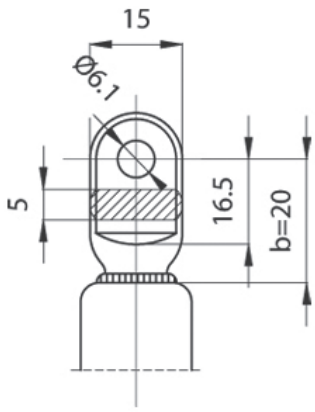

R16

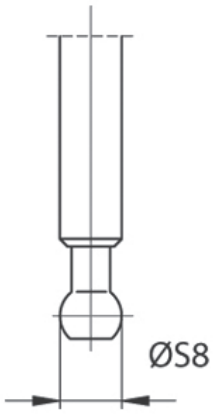

R17	R18
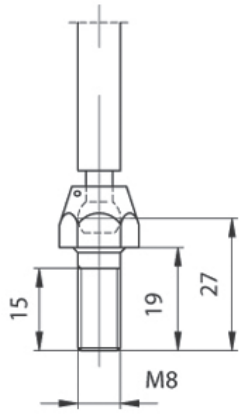	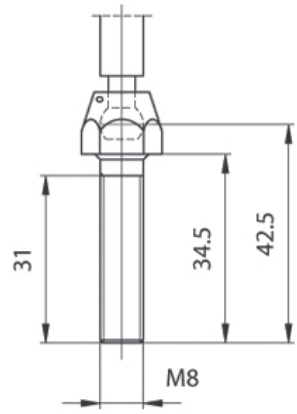
R19	**R20**
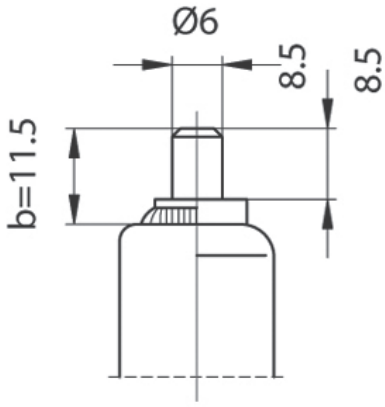	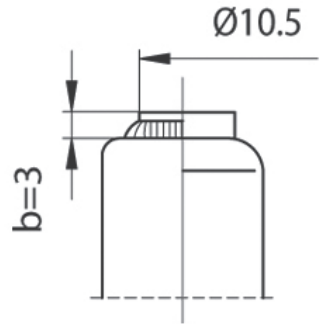
R21	**R22**
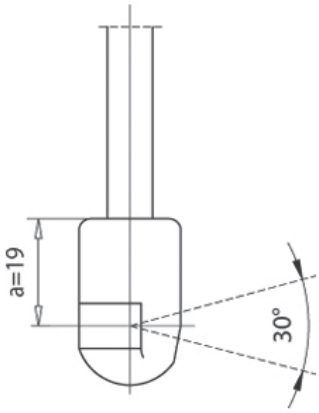	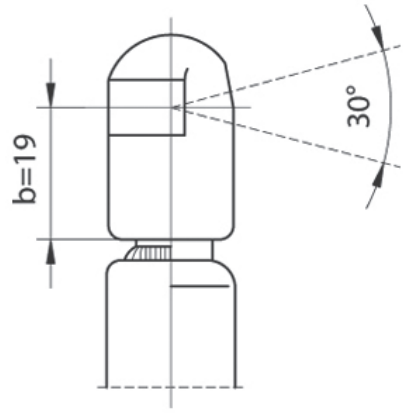
R23	**R24**
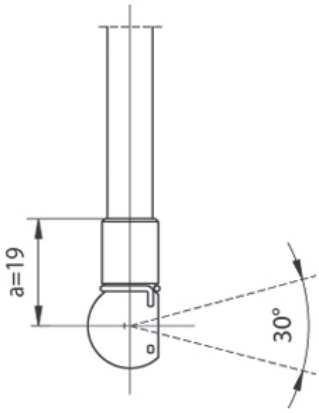	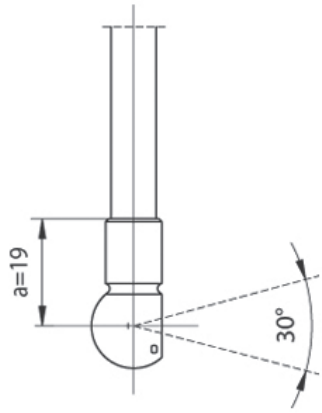

R25	R26
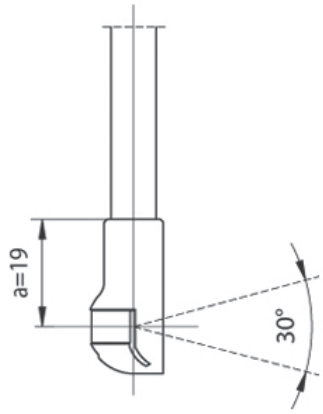	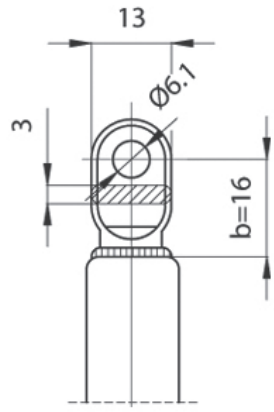
R27	**R28**
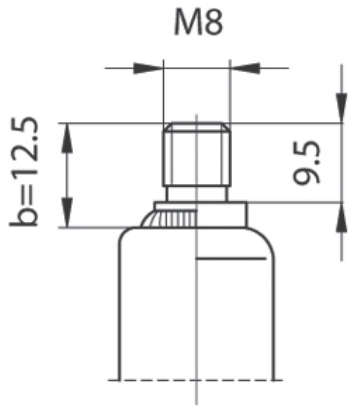	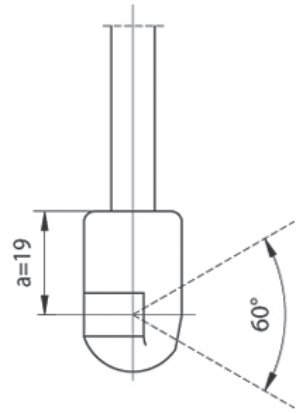
R29	**R30**
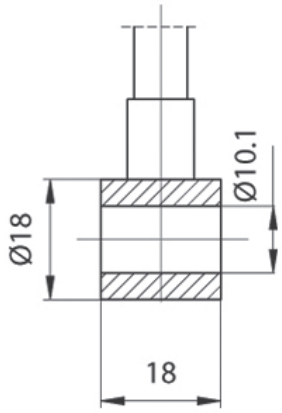	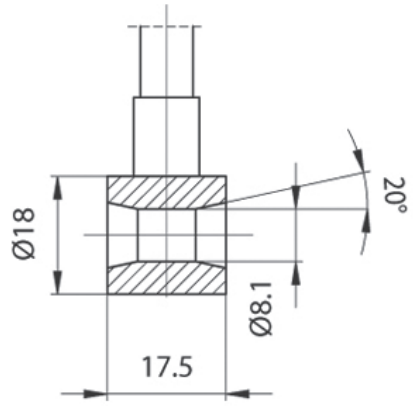
R31	**R32**
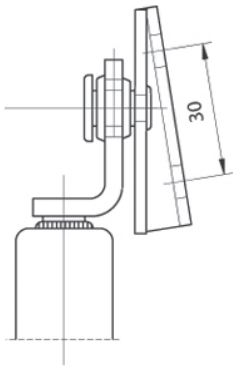	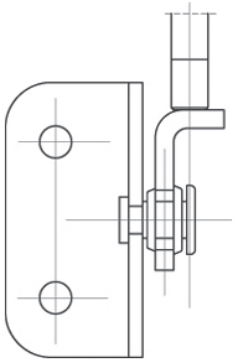

R33	R34
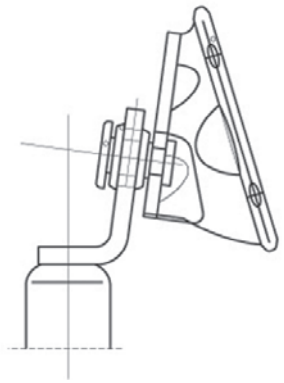	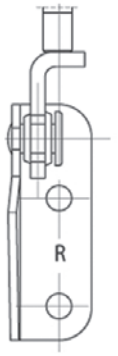
R35	**R36**
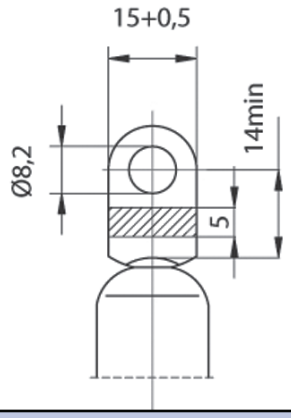	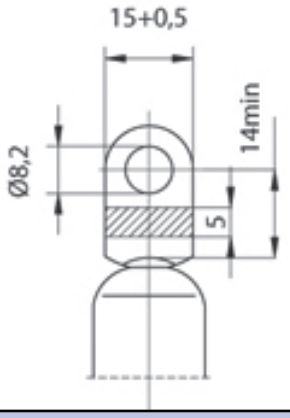
R37	**R38**
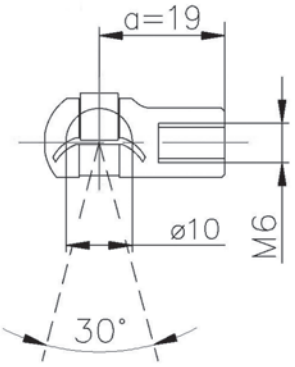	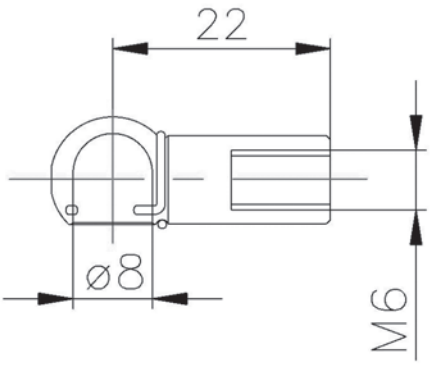
R39	**R40**
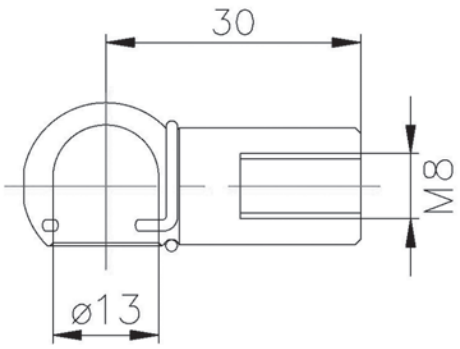	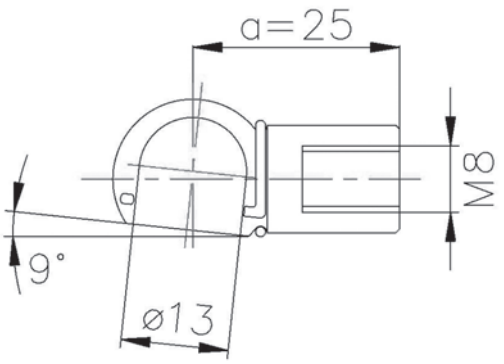

R41

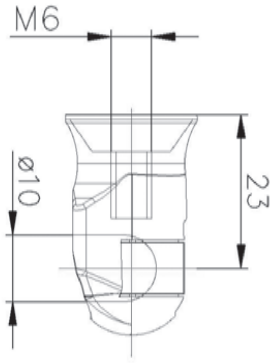

R42

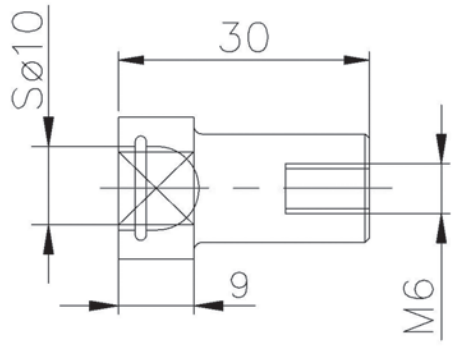

R43

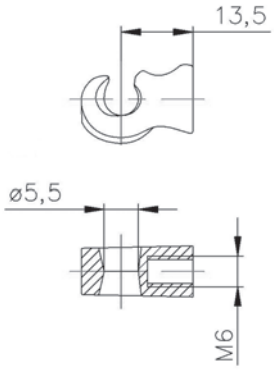

R44

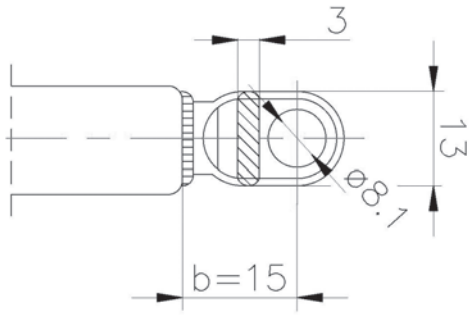

R45

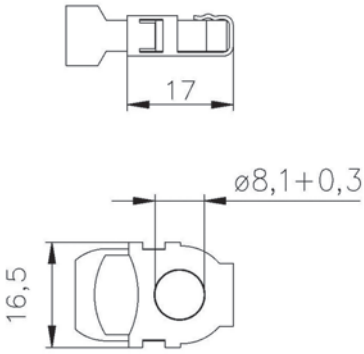

R46

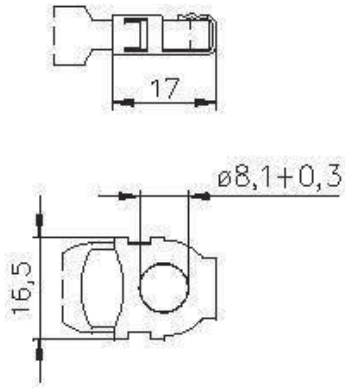

R47

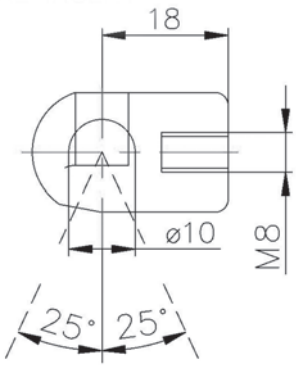

R48

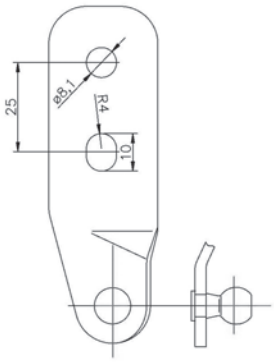

R49	R50
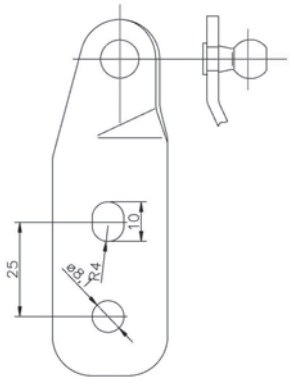	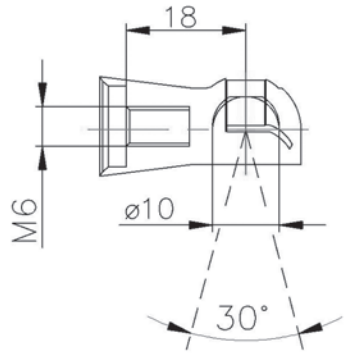
R51	**R52**
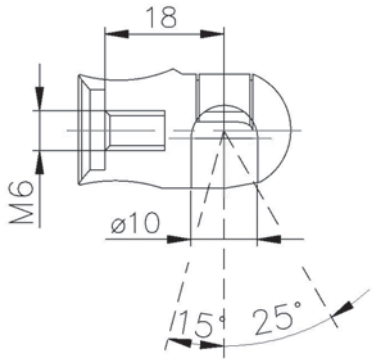	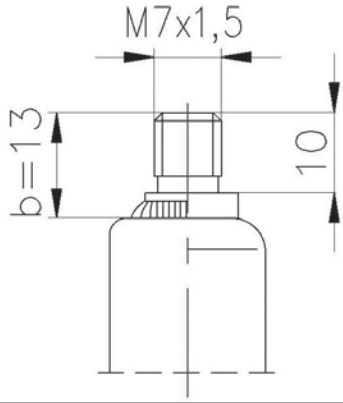
R53	**R54**
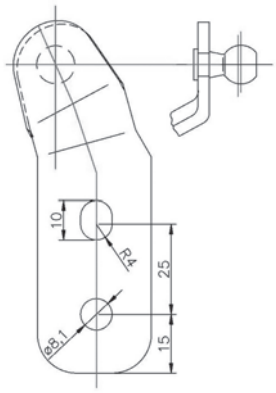	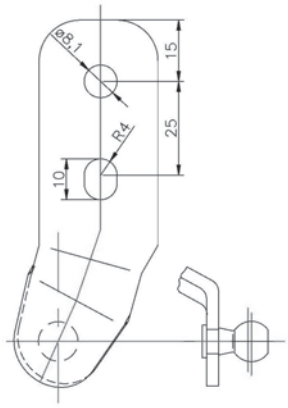
R55	**R56**
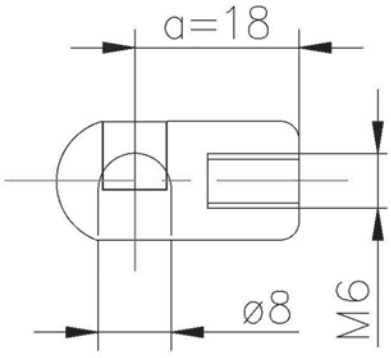	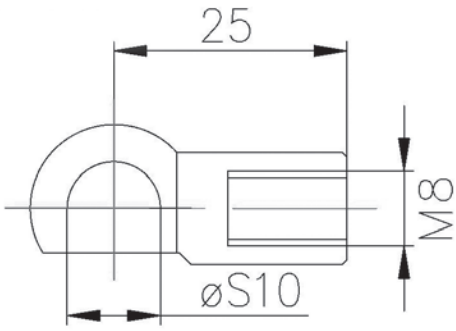

R57	R58
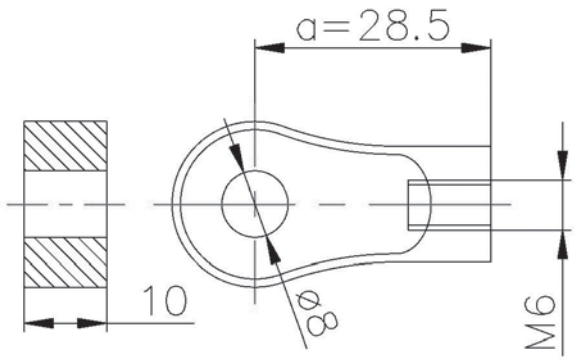	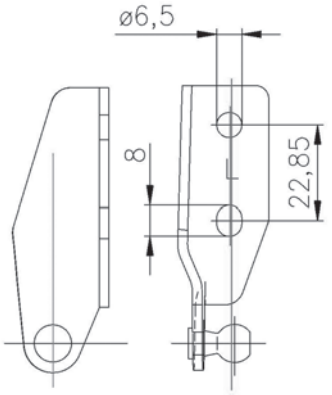
R59	**R60**
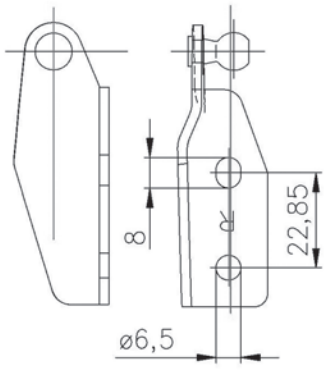	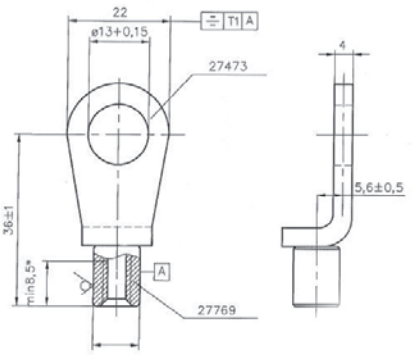

Molle a gas - Tavole di comparazione 1
Gas springs - Cross reference guide 1
Gasfedern - Gegenuberstellung 1
Vérins de Hayons - Table de correspondance 1
Resortes de gas - Tabla de equivalencias 1
Molas de gas - Tabela de equivalencias 1
Αμορτισέρ μπαγκάζ - Πινακας αντιστοιχιων 1
Sprężyny gazowe - Tabela porównawcza 1
Газовые упоры - Таблица переходов 1
Gazlı amortisörler - Çapraz referans tablosu 1

O.E.

O.E.	MAGNETI MARELLI
ALFA ROMEO	
46739202	GS0762
46771551	GS0221
50508010	GS0946
50508060	GS0938
50508706	GS0692
50515442	GS0692
60505771	GS0588
60540532	GS0530
60558222	GS0968
60564112	GS0599
60566147	GS0273
60567794	GS0438
60577413	GS1023
60583192	GS0531
60591762	GS0272
60594694	GS0962
60594694	GS0962
60594694	GS1023
60604174	GS0531
60604174	GS0599
60604823	GS0270
60612565	GS0271
60622424	GS0411
60651067	GS0214
60654724	GS0386
60657685	GS0215
60658924	GS0444
60664833	GS0435
60680087	GS0764
60683933	GS0946
60688574	GS0763
60689182	GS1023
60694168	GS0961
60694616	GS0691
605582220	GS0968
AUDI	
893823360	GS0585
893823360	GS0585
893827552	GS0409
3B0823239A	GS0265
3B0823359	GS0265
3B0823359B	GS0265

O.E.	MAGNETI MARELLI
AUDI	
443823359B	GS0412
4A0823359B	GS0380
4A0823359C	GS0743
4A0823359C	GS0380
4A5827551	GS0420
4A5827552	GS0110
4A9827552	GS0410
4B0823359A	GS0265
4B0823359B	GS0265
4B0823359C	GS0265
4B3823359	GS0380
4B5827552A	GS0233
4B5827552C	GS0233
4B5827552D	GS0233
4B5827552F	GS0222
4B5827552G	GS0222
4B9827552A	GS0237
4B9827552C	GS0238
4B9827552E	GS0238
4B9827552G	GS0239
4B9827552H	GS0511
4B9827552J	GS0512
4B9827552L	GS0238
4B9827552L	GS0238
4B9827552M	GS0238
4B9827552M	GS0238
4B9827552N	GS0513
4D0823359F	GS0275
4D0823551B	GS0274
4D0827551A	GS0274
4D0827551B	GS0274
4E0823359C	GS1012
4E0827551A	GS1015
4E0827551B	GS1013
4E0827551C	GS1013
4E0827552B	GS1014
4E0827552C	GS1014
4F0823359	GS0803
4F0823359A	GS0803
4F5827552	GS0810
4F5827552B	GS0810
4F9827552B	GS0812
4F9827552C	GS0812

O.E.	MAGNETI MARELLI
AUDI	
4L0823359	GS0805
4L0827552C	GS0840
4L0827552F	GS0840
4LO827552E	GS1015
893827552A	GS0532
893827552A	GS0532
895523552A	GS0533
895823552A	GS0533
8A0823360A	GS0331
8A5827552	GS0371
8A5827552A	GS0103
8A9827552D	GS0429
8D0823359	GS0744
8D0823359A	GS0744
8D0823359B	GS0744
8D5827552	GS0134
8D5827552A	GS0134
8D5827552B	GS0134
8D5827552C	GS0134
8D5827552D	GS0134
8D5827552F	GS0134
8D9827552	GS0196
8D9827552E	GS0226
8D9827552F	GS0197
8E0823359A	GS0381
8E5827552J	GS0811
8E5827552K	GS0811
8E9827552G	GS0813
8E9827552H	GS0813
8G0827552C	GS0977
8GO827552B	GS0977
8H0823359	GS0268
8H0827552B	GS0907
8J0823359C	GS0806
8J7827552	GS1045
8J8827552	GS0819
8K9827552	GS0663
8K9827552	GS0928
8K9827552A	GS0663
8L0823359	GS0260
8N0823359	GS0134
8N7827552A	GS0933
8N7827552C	GS0933

O.E.	MAGNETI MARELLI
AUDI	
8N8827552	GS0276
8N8827552A	GS0450
8N8827552B	GS0450
8P0823359	GS0268
8P0823359A	GS0674
8P0823359B	GS0674
8P3827552A	GS0460
8P3827552A	GS0460
8P4827552B	GS0815
8P7827552C	GS0909
8P7827552D	GS0909
8P7827552F	GS0909
8R0823359A	GS0945
8R0827552	GS0681
8R0827552A	GS0937
8T0823359	GS0807
8Z0827552A	GS0365
8Z0827552B	GS0365
D0823354	GS0744
AUSTIN	
AFP1282	GS0041
AUTOBIANCHI	
4480856	GS0017
4484653	GS0017
5970097	GS0589
60617400	GS0589
BMW	
7060688	GS0757
11811869147	GS0640
41627166758	GS0699
51231868555	GS0590
51231869147	GS0591
51231869147	GS0591
51231907962	GS0590
51231908465	GS0640
51231927129	GS0590
51231944119	GS0523
51231960852	GS0413
51233400352	GS0835
51237008745	GS0669
51237016178	GS0943
51237060550	GS0755

O.E.	MAGNETI MARELLI
BMW	
51237070670	GS0963
51237118370	GS0670
51237148346	GS0702
51237185032	GS1021
51238119558	GS0414
51238150077	GS0434
51238174866	GS0439
51238202688	GS0262
51238402551	GS0754
51241908431	GS0924
51241908431	GS0639
51241934270	GS0445
51241947096	GS0451
51241960862	GS0169
51242231663	GS0446
51242264448	GS0259
51242491349	GS0235
51243400379	GS0759
51244212802	GS0162
51244365788	GS0760
51244394052	GS0760
51247008754	GS0669
51247008764	GS0761
51247016186	GS0934
51247038248	GS0736
51247060622	GS0757
51247060623	GS0760
51247118885	GS0736
51247127875	GS0758
51247129194	GS0700
51247129215	GS0701
51248110327	GS0445
51248146290	GS0452
51248149327	GS0522
51248149328	GS0522
51248151579	GS0169
51248159239	GS0521
51248171158	GS0428
51248171480	GS0524
51248190688	GS0534
51248206652	GS0234
51248217305	GS0428
51248220075	GS0162

O.E.	MAGNETI MARELLI
BMW	
51248222913	GS0582
51248227895	GS0735
51248230070	GS0236
51248230369	GS0522
51248230370	GS0522
51248232873	GS0212
51248251547	GS0736
51248254281	GS0162
51248399087	GS0930
51248402405	GS0756
CHEVROLET	
96301822	GS0508
96306833	GS0095
96310381	GS0447
96310381	GS0514
96314606	GS0097
96394240	GS0447
96394240	GS0514
96507773	GS0097
96518910	GS0097
96540939	GS0780
96548931	GS0859
96557538	GS0095
96557539	GS0097
96563503	GS0097
96598008	GS0097
96830123	GS0997
96830124	GS0996
96940087	GS0447
96984466	GS0997
CHRYSLER	
5008938AA	GS0715
04589589AA	GS0716
04589607AA	GS0715
04589626AA	GS0709
05109605AC	GS0710
CITROËN	
1354844080	GS0921
1401103980	GS0685
1498071080	GS0685
5429798	GS0597

O.E.	MAGNETI MARELLI
CITROËN	
5459705	GS0600
5490307	GS0600
5802A007	GS0841
5802A008	GS0841
620915680	GS0422
6895002020	GS0958
6895002030	GS0958
6895009090	GS0958
6895009100	GS0958
689500H010	GS0753
689500H020	GS0753
6896002010	GS0958
6896002020	GS0958
6896009060	GS0958
75521825	GS0010
7552182580	GS0010
7552182580	GS0011
792511	GS0269
792513	GS0261
792514	GS0462
792520	GS0887
8731	GS0112
873100000	GS0359
873196	GS0504
873197	GS0504
8731A3	GS0455
8731A8	GS0422
8731C0	GS0148
8731C1	GS0457
8731C2	GS0202
8731C3	GS0203
8731E3	GS0128
8731E4	GS0427
8731E5	GS0456
8731F1	GS0161
8731F6	GS0385
8731F7	GS0535
8731G3	GS0150
8731G6	GS0340
8731H8	GS0454
8731J9	GS0889
8731K8	GS0967
8731L0	GS0753

O.E.	MAGNETI MARELLI
CITROËN	
8731L9	GS1020
8731N8	GS0965
8731N9	GS0848
8731P2	GS0822
8731P4	GS0821
8731P5	GS1044
8731P5	GS0685
8731Q1	GS0841
8731Q9	GS1044
8731Q9	GS0685
8731R6	GS0683
8731R7	GS0679
8731R8	GS1019
8731R9	GS1018
8731S0	GS0684
8731S0	GS0684
8731V0	GS0921
8731V6	GS1018
8731VO	GS0921
949901	GS0203
95492745	GS0011
95496134	GS0019
95568454	GS0592
9556845480	GS0592
9558825480	GS0019
95598526	GS0594
9559852680	GS0594
95606490	GS0453
9560649080	GS0453
95631956	GS0598
9563195680	GS0598
95635988	GS0593
9563598880	GS0593
95635989	GS0596
9563598980	GS0596
9563914480	GS0458
96026964	GS0506
96027543	GS0033
9602754380	GS0033
96095456	GS0505
9612212280	GS0507
9612361280	GS0254
9618119180	GS0148

O.E.	MAGNETI MARELLI
CITROËN	
9620677480	GS0427
9621907680	GS0128
9629618980	GS0269
9637509380	GS0261
9639853880	GS0150
9640894580	GS0535
9641721980	GS0454
96472953808731K0	GS0847
9647295480	GS0733
9650854180	GS0889
9654433480	GS0822
9654433580,	GS0821
9654438680	GS0848
9654438880	GS0965
9661815180	GS0967
9682256580	GS0679
C101860033	GS0422
DACIA	
8200735264	GS0926
DAEWOO	
90159607	GS0031
96298318	GS0094
96306157	GS0086
96306833	GS1027
96306833	GS0095
96314606	GS0097
96324117	GS0086
96324119	GS0086
96507773	GS0097
96518910	GS0097
96557530	GS0094
96557538	GS1027
96557538	GS0095
96557539	GS0097
96563503	GS0097
96598008	GS0097
96601844	GS1026
81850A70B02000	GS0050
DAEWOO FSO	
21273	GS0045
21331	GS0051

O.E.	MAGNETI MARELLI
DAEWOO FSO	
21333	GS0052
21377	GS0058
21406	GS0061
21457	GS0069
21458	GS0070
041190	GS0007
043882	GS0027
58084	GS0044
63397	GS0057
77187	GS0007
77187	GS0059
77763	GS0074
81768	GS0089
1171783	GS0027
4369120	GS0001
DAIHATSU	
68950B1031	GS0966
68960B1031	GS0966
FIAT	
0000051734960	GS0860
0046830389	GS0768
1489342080	GS0459
1489342080	GS0459
21083	GS0030
39401990	GS0010
39401990	GS0034
39462450	GS0011
39481770	GS0502
39481770	GS0601
4297742	GS0015
4392120	GS0011
4392129	GS0009
4392130	GS0010
4405569	GS0018
4418499	GS0042
4424045	GS0073
4483658	GS0016
46304290	GS1043
46309135	GS0540
46420780	GS0077
46429507	GS0484
46433702	GS0437

O.E.	MAGNETI MARELLI
FIAT	
46453503	GS0080
46514867	GS0372
46524047	GS0085
46524049	GS0085
46524051	GS0085
46524678	GS0164
46530124	GS0463
46559850	GS0442
46559858	GS0442
46720558	GS0989
46720558P5	GS0989
46730681	GS0990
46730681C3	GS0990
46744596	GS0163
46762434	GS0436
46763101	GS0485
46773097	GS0398
46783650	GS0067
46784590	GS0038
46784994	GS0279
46784995	GS0280
46792437	GS0463
46810696	GS0449
46812168	GS0382
46824070	GS0449
46826216	GS0398
46827091	GS0100
46830389	GS0768
46835404	GS0080
51709681	GS0436
51716995	GS0536
51716996	GS0537
51734960	GS0860
51736743	GS0436
51736744	GS0436
51736745	GS0536
51736746	GS0537
51785412	GS0850
51801718	GS1017
51812267	GS0849
5975342	GS0011
5981660	GS0041
5993542	GS0012

O.E.	MAGNETI MARELLI
FIAT	
5993542	GS0064
71743352	GS0844
71743353	GS0844
7516691	GS0063
7550172	GS0039
7550938	GS0006
7587706	GS0013
76063040	GS0281
7636049	GS0040
7636049	GS0049
7671700	GS0014
7671700	GS0065
7734566	GS0078
7769737	GS0067
7774707	GS0068
8185079J00	GS0844
8186079J00	GS0844
8186079J01	GS0844
82429686	GS0043
82473205	GS0539
82486283	GS0483
8731P5	GS1044
8731Q9	GS1044
9622553680	GS0282
9626493880	GS0282
9630698380	GS0303
FORD	
1008276	GS0146
1009060	GS0126
1025425	GS0135
1034930	GS0393
1047212	GS0126
1070024	GS0223
1071669	GS0167
1071732	GS0467
1072394	GS0467
1074368	GS0223
1079800	GS0167
108277	GS0146
1088369	GS0393
1092108	GS0467
1093705	GS0167

O.E.	MAGNETI MARELLI
FORD	
1094814	GS0126
1114031	GS0467
1117046	GS0230
1117246	GS0503
1117394	GS0369
1117690	GS0328
1119688	GS0231
1120812	GS0328
1124003	GS0468
1136483	GS0168
1141159	GS0205
1146649	GS0168
1150277	GS0223
1150279	GS0223
1211497	GS0288
1212586	GS0288
1218538	GS0204
1219986	GS0232
1224731	GS0206
1225361	GS0964
1232189	GS0368
1251915	GS0204
1252377	GS0287
1252806	GS0287
1336159	GS0851
1336230	GS0729
1349309	GS0729
1376673	GS0851
1381555	GS0836
1405189	GS0837
1434296	GS0836
1434313	GS0837
1453743	GS0969
1477988	GS0838
1484158	GS0770
1484371	GS0862
1496865	GS0770
1520777	GS0676
1523356	GS0677
1537538	GS0682
1542413	GS0678
1650686	GS0284
1666591	GS0991

O.E.	MAGNETI MARELLI
FORD	
1666983	GS0383
1C15V406A10AD	GS0515
1C15V406A10EA	GS0515
1S7116C826AD	GS0328
1S71A406A10AB	GS0231
1S71A406A10CD	GS0232
1S71A406AD10AC	GS0230
1S71F406AD10AB	GS0503
1S71N406A10AB	GS0369
1S71N406A10AC	GS0368
2N11N406A10AD	GS0288
2S51B406A10AB	GS0204
2S51B406A10AC	GS0204
2S61B406A10AB	GS0205
2S61B406A10AC	GS0206
2T14V406A10AB	GS0294
3M51R406A10AB	GS0287
3S51B406A10AA	GS0964
4346105	GS0515
4378216	GS0294
4M51N406A10AA	GS0729
4M51N406A10AB	GS0729
51794232	GS0678
5M51F406A10AA	GS0851
5M51F406A10AB	GS0851
6186916	GS0383
6656800	GS0160
6723080	GS0108
6723080	GS0172
6885988	GS0160
6900217	GS0108
6962811	GS0383
6M21R406A10AB	GS0836
6M21R406A10AD	GS0836
6M21U406A10AB	GS0837
6M21U406A10AC	GS0837
6N41L406A10AA	GS0969
7245797	GS0291
7300069	GS0126
7S71A406A10BA	GS0862
7S71F406A10AF	GS0770
7S71N406A10AD	GS0838
81ABD406A10BA	GS0285

O.E.	MAGNETI MARELLI
FORD	
81ABD406A10BB	GS0284
83BBA406A10AD	GS0079
83BBA406A10BD	GS0252
83BBA406A10CD	GS0605
83BBN406A10AD	GS0292
83BBN406A10BB	GS0293
84FBB406A10BB	GS0023
84FBB406A10CB	GS0466
85GBA406A10BD	GS0290
85GBA406A10CD	GS0109
85GBA406A10DD	GS0603
86ABB406A10GA	GS0464
86ABB406A10GA	GS0465
86ABB406A10HA	GS0199
86ABF406A10AA	GS0602
86ABW406A10CA	GS0285
86BBA406A10AA	GS0538
86BBA406A10BA	GS0538
86VBV406A10BA	GS0421
86VBV406A10CA	GS0075
88BBA406A10BAD	GS0605
89ABB406A10HA	GS0200
89FBB406A10A1C	GS0140
89FBB406A10B1C	GS0141
8A61A406A10AB	GS0677
8V41S406A10AD	GS0682
8V41S406A10BB	GS0676
91ABA406A10A1D	GS0170
91ABA406A10A1E	GS0170
91ABA406A10C1	GS0171
91ABA406A10C1E	GS0108
91ABW406A10A1C	GS0160
91ABW406A10AF	GS0160
91ABW406A10AG	GS0160
91ABW406A10C1C	GS0172
93ABA406A10B1B	GS0251
93ABA406A10C1B	GS0108
93BBA406A10ADE	GS0125
93BBA406A10AE	GS0125
93BBA406A10BD	GS0174
93BBF406A10AB	GS0289
93BBF406A10BB	GS0423
93BBN406A10AC	GS0330

O.E.	MAGNETI MARELLI
FORD	
93FBB406A10AA	GS0142
93FBB406A10BA	GS0146
9410495	GS0969
9551B460A10AA	GS0678
95GB16C826AB	GS0291
95VW442K08AE	GS0126
95VW442K08AG	GS0126
95VW442K08AH	GS0126
96FBB406A10AA	GS0146
96FBB406A10BA	GS0146
96GBN406A10AF	GS0383
96GBN406A10AF	GS0385
97KGB406A10AA	GS0135
D83ABF406A10BA	GS0602
V91ABL406A10AB	GS0991
V91ABL50600AA	GS0992
V97FBC406A10AB	GS0393
V97FBC406A10AC	GS0393
XS41A406A10AE	GS0223
XS41A406A10AF	GS0223
XS41F406A10AC	GS0467
XS41F406A10AD	GS0467
XS41F406A10AE	GS0467
XS41F406A10AF	GS0468
XS41N406A10AD	GS0167
XS41N406A10AE	GS0167
XS41N406A10AH	GS0168
XS41N406A10AJ	GS0168
XS41N406A10AJ	GS0287
HONDA	
04741S10000	GS0448
04741S6A000	GS0606
04741SAA000	GS0949
04741SEG900	GS0720
74820S1CE01	GS0852
74820S1CE018	GS0852
74820S1EE01	GS0121
74820S5SE01	GS0390
74820S6DE02	GS0366
74820SCA003	GS0950
74820SCA0031	GS0950

O.E.	MAGNETI MARELLI
HONDA	
74820SH3305	GS0558
74820SK3E20	GS0509
74820SK3E20	GS0191
74820SMGE01	GS0900
74820SMGE010C1	GS0900
74820SMGE02	GS0900
74820SMGE021M1	GS0900
74820SR3003	GS0559
74820ST3E01	GS0213
74820ST3E02	GS0213
74820ST3E02	GS0399
74820ST3E51	GS0213
74820ST3E52	GS0213
74820SWAA01	GS0708
74820SWAA01	GS0951
74820TL4G01	GS1028
74820TL4G31	GS1029
74870S5SE01	GS0390
74870S6DE02	GS0366
74870SWAA01	GS0708
74870SWAA01	GS0951
BHE38017	GS0509
BHE38025	GS0191
GTS120	GS0191
GTS122	GS0509
HYUNDAI	
817712	GS0826
8116126000	GS0377
8177006010	GS0953
8177006011	GS0953
8177017010	GS0607
8177017030	GS0607
8177022200	GS0156
8177025220	GS1003
8177126010	GS0376
8177129221	GS0295
8177138500	GS1010
8177139501	GS1010
8178022200	GS0156
8178025210	GS1003
8178025220	GS1003

O.E.	MAGNETI MARELLI
HYUNDAI	
8717126010	GS0296
871702E020	GS0828
811602B000	GS0714
811602B010	GS0714
811603J000	GS0919
811612C000	GS0879
811613D000	GS0561
811613K000	GS0824
817700X000	GS0712
817701C000	GS0825
817701C001	GS0825
817701J000	GS0713
817702B001	GS0985
817702L200	GS0707
817703J000	GS0914
817704H030	GS0922
817711Z000	GS0952
817712C010	GS0373
817712C011	GS0373
817712C020	GS0374
817712C021	GS0374
817712D210	GS0560
817712D220	GS0375
817712R000	GS0952
817713A00	GS0881
817713A001	GS0881
817713D000	GS0153
817713D001	GS0153
817713D002	GS0153
817713K000	GS0827
817801J000	GS0713
817802L200	GS0707
817804H030	GS0922
817812R000	GS0952
INNOCENTI	
7516691	GS0063
7636049	GS0040
7636049	GS0111
53471007	GS0055
IŻ	
21086308010	GS0113
21086308015	GS0024

O.E.	MAGNETI MARELLI
JEEP	
55136764AA	GS0940
55352896AB	GS0940
55352897AB	GS0940
55394472AA	GS0718
68025357AA	GS0717
68025359AA	GS0704
KIA	
13243589	GS0789
811813E000	GS0771
871703E000	GS0888
871803E000	GS0888
8177007000	GS0774
8178007000	GS0774
811813E010	GS0771
871703E010	GS0888
871803E010	GS0888
811813E011	GS0771
817713E011	GS0773
817813E011	GS0773
817713E020	GS0773
817813E020	GS0773
0K2FB62620	GS0777
0K2FB63620	GS0777
0K53Y56620	GS0772
0K53Y56630	GS0772
0K53Y62620	GS0775
0K53Y63620	GS0775
0K53Z56620	GS0772
0K53Z56630	GS0772
0K53Z62620	GS0775
0K53Z63620	GS0775
817701D010	GS1030
817701G000	GS0778
817701H010	GS0789
817701H510	GS0903
817702F210	GS0779
817713C010	GS0776
817801D010	GS1030
817801G000	GS0778
817801H010	GS0789
817801H010	GS0789
817801H510	GS0903

O.E.	MAGNETI MARELLI
KIA	
817802F210	GS0779
0K2FB62620A	GS0777
0K2FB62620B	GS0777
0K2FB63620A	GS0777
0K2FB63620B	GS0777
0K53Z56620A	GS0772
0K53Z56620B	GS0772
0K53Z56630A	GS0772
0K53Z56630B	GS0772
0K53Z62620A	GS0775
0K53Z63620A	GS0775
OK01H62610E	GS0954
LADA	
21086308010	GS0024
21086308010	GS0297
21086308015	GS0024
21118231015	GS0024
21118231015	GS0298
21128231010	GS0107
21216308010	GS0106
21216308010	GS0297
21216308015	GS0024
21216308015	GS0025
212136308010	GS0024
212136308015	GS0024
LANCIA	
0000046817935	GS0769
1479303080	GS0302
46428438	GS0300
46433702	GS0437
46453835	GS0301
46725028	GS0299
46817935	GS0769
51809199	GS0690
5970097	GS0138
60617400	GS0138
7703325	GS0138
7792951	GS0158
82336687	GS0609
82380453	GS0610

O.E.	MAGNETI MARELLI
LANCIA	
82437256	GS0608
9618278480	GS0302
9630698380	GS0303
B1287F26	GS0541
LAND ROVER	
32028398	GS0935
32030482	GS0942
32030483	GS0942
32031392	GS0932
5H2216E610AA	GS0942
5H22406A10BA	GS0932
6H5216C826BD	GS0948
6H52406A10AF	GS0947
ALR1050	GS0675
BHE760020	GS0935
BHE780012	GS0932
BKK760010	GS0944
BKK780010	GS0942
LR001773	GS0948
LR002104	GS0947
MXC7833	GS0304
XH4216E610AA	GS0944
XH42406A10AA	GS0935
LEXUS	
534400W090	GS1008
534400W091	GS1008
534400W100	GS1009
534400W101	GS1009
534500W070	GS1008
534500W071	GS1008
534500W080	GS1009
534500W081	GS1009
645300W090	GS1007
645300W091	GS1007
MAZDA	
96FBB406A10BA	GS0146
B28C62620B	GS0906
B28C63620C	GS0905
BN8W56930	GS0830
BN8W56930B	GS0830
BP4K62620D	GS0829

O.E.	MAGNETI MARELLI
MAZDA	
BP4K62620F	GS0829
BP4K63620D	GS0829
BP4K63620F	GS0829
D65162620	GS0706
DD1062620	GS0831
DD1063620	GS0831
FE1556930C	GS1031
G21B62620A	GS0749
G21B63620A	GS0749
GE4V62620D	GS0911
GE4V63620D	GS0912
GJ6A56930	GS1002
GJ6E56930	GS1002
GJ6J62620	GS0748
GJ6J63620	GS0748
GS1D56930C	GS0705
GS1M63620C	GS0711
GS2A63620C	GS0719
NF7956930B	GS0875
NF8056930B	GS0875
MERCEDES BENZ	
0009802464	GS0101
0009802564	GS0101
0009803764	GS0101
19808064	GS0739
0019808064	GS0739
1647400145	GS0871
1647400245	GS0871
1648800029	GS0981
1648800129	GS0980
1689800164	GS0185
1689800964	GS0185
1689801164	GS0186
1689801264	GS0187
1697400345	GS0783
1699800864	GS0784
1699800964	GS0784
1707500036	GS0745
1708800229	GS0979
1717500036	GS0883
1718800129	GS0863
1719800164	GS0864

O.E.	MAGNETI MARELLI
MERCEDES BENZ	
2029800364	GS0305
2037400045	GS0469
2038800029	GS0568
2038800429	GS0569
2039800164	GS0738
2039800764	GS1032
2047400145	GS0785
2049800064	GS0781
2087500036,20875	GS0970
2088800029	GS0306
2099800064	GS0873
2099800364	GS0873
2099800464	GS0873
2099800564	GS0873
2108800229	GS0430
2108800429	GS0430
2118800029	GS0307
2119800364	GS1005
2119800464	GS1005
2207500136	GS0973
2208800329	GS0611
2218800329	GS0984
2307500036	GS0865
2308800029	GS0876
2309800164	GS0866
2309800264	GS0867
2517400045	GS1004
2518800129	GS0982
2518800229	GS0983
4149800064	GS0542
6389800364	GS0612
6389800364	GS0327
6389800464	GS0613
6389800464	GS0326
6389800464	GS0326
6399800364	GS0782
0009223V005	GS0878
A1247500036	GS0998
A1299800664	GS0971
A2119800464	GS1005
A2208800329	GS0611

O.E.	MAGNETI MARELLI
MG	
AFP1282	GS0041
BHE140010	GS0443
BHE140010	GS0443
BHE140010	GS0443
BHE140020	GS0479
BHE140020	GS0479
BHE140020	GS0614
BHE45001	GS0426
BHE450030	GS0426
BHE500050	GS0405
BHE500070	GS0480
BHE500070	GS0615
BKK500010	GS1024
BMH500010	GS0404
MINI	
41626801258	GS1022
41626801258	GS0400
51237148864	GS1022
51237175020	GS0671
51247167442	GS0703
MITSUBISHI	
MITSUBISHI	
MR415173	GS0978
MR415174	GS0978
MR526933	GS1033
MR959243	GS0724
MR959247	GS0725
MR991807	GS0823
MR991808	GS0823
MB926947	GS0570
MB927791	GS0350
MR101555	GS0277
MR138596	GS0579
MR248939	GS0349
MR248940	GS0349
MOSKWICZ	
21416306206	GS0004
NISSAN	
6547040U10	GS0616
6547140U10	GS0616

O.E.	MAGNETI MARELLI
NISSAN	
7700303186	GS0901
7700308167	GS0901
844302F000	GS0320
844302F010	GS0319
8443090J00	GS0525
8443090J10	GS0526
844309F500	GS0319
84430AV600	GS0348
8465124	GS0901
904501W302	GS0846
904501W312	GS0846
904504F110	GS0955
904504F111	GS0955
9045055A10	GS0403
9045073R00	GS0986
9045079N02	GS0580
904509U00A	GS0767
90450AX000	GS0356
90450AX610	GS0356
90450BM400	GS0737
90450BM425	GS0737
90450BU000	GS0571
90450EQ300	GS0874
90450EQ301	GS0874
90450EQ30A	GS0874
90450EQ31A	GS0874
90450EQ325	GS0874
90450EQ325	GS0874
90450JD01B	GS0956
904519C104	GS0574
90451AX000	GS0356
90451EQ30A	GS0874
90451EQ31A	GS0874
904522F705	GS0425
904522F715	GS0572
904522F725	GS0425
904523F200	GS0316
904523F201	GS0315
904523F202	GS0322
904526F100	GS0425
904526F126	GS0572
904528F825	GS0573
9045298J26	GS0322

O.E.	MAGNETI MARELLI
NISSAN	
904529F725	GS0415
90452AU200	GS0085
90452AV700	GS0406
904601W301	GS0766
904606W560	GS0766
OPEL	
10233372	GS0516
10233372	GS0516
10233373	GS0516
10233373	GS0516
10324007	GS0516
10324007	GS0516
10400854	GS0516
10400854	GS0516
10400855	GS0516
10400855	GS0516
1178224	GS0341
1180016	GS0728
1180402	GS0084
1180405	GS0786
13101335	GS0342
13122695	GS0787
13128759	GS0788
13182309	GS0872
13182537	GS0892
13191401	GS0882
132020	GS0988
13220159	GS0870
13241974	GS0839
13246577	GS0915
13246577	GS0915
13247868	GS0882
13247949	GS0987
13252173	GS0728
132532	GS0870
132670	GS0119
132673	GS0664
132674	GS0516
132674	GS0516
132675	GS0102
132677	GS0165
132681	GS0256

O.E.	MAGNETI MARELLI
OPEL	
132682	GS0392
132691	GS0342
132693	GS0385
132694	GS0577
132694	GS0577
132695	GS0578
132695	GS0578
132696	GS0528
132696	GS0528
132701	GS0384
132702	GS0242
132703	GS0243
132704	GS0031
132706	GS0898
132708 (without speakers)	GS0402
132709	GS0402
132710	GS0401
132712	GS0577
132712	GS0577
132713	GS0528
132713	GS0528
132714	GS0578
132714	GS0578
132715	GS0257
132716	GS0032
132717	GS0363
132718	GS0241
132719	GS0124
132720	GS0155
132721	GS0076
132724	GS0053
132725	GS0143
132726	GS0364
132727	GS0081
132729	GS0516
132729	GS0516
132730	GS0516
132730	GS0516
132731	GS0416
132734	GS0899
132735 (without wiper)	GS0401
132736	GS0516
132736	GS0516

O.E.	MAGNETI MARELLI
OPEL	
132737	GS0516
132737	GS0516
132739	GS0137
132741	GS0166
132742	GS0136
132743	GS0734
132743	GS0734
132749	GS0788
132757	GS0787
13278257	GS0988
13321298	GS0915
13332570	GS0915
13332885	GS0988
176105	GS0915
176124	GS0915
176387	GS0177
176413	GS0872
176414	GS0892
176541	GS0988
176601	GS0362
176602	GS0362
176603	GS0361
176604	GS0994
176605	GS0209
176607	GS0337
176608	GS0839
176608	GS0839
176608	GS0839
176609	GS0882
176676	GS0987
24411022	GS0166
24454473	GS0341
24463829	GS0734
24465295	GS0786
4414419	GS0517
4414419	GS0517
4705436	GS1034
4705436	GS0087
4705437	GS1034
4705437	GS0088
4705684	GS0087
4705685	GS0088
4708557	GS1034

O.E.	MAGNETI MARELLI
OPEL	
4808912	GS0995
4809275	GS0939
5132262	GS0118
5132267	GS0993
8186083E10X10	GS1034
8186084E00	GS1034
90043132	GS0392
90119276	GS0577
90119276	GS0577
90127136	GS0577
90127136	GS0577
90127137	GS0528
90127137	GS0528
90127138	GS0578
90127138	GS0578
90138517	GS0528
90138517	GS0528
90138518	GS0578
90138518	GS0578
90158125	GS0385
90159607	GS0031
90159629	GS0898
90191627	GS0243
90191920	GS0242
90195260	GS0384
90196023	GS0899
90227934	GS0257
90227936	GS0032
90241995 (withour wiper)	GS0401
90241996	GS0401
90246620 (without speakers)	GS0402
90246621	GS0402
90275073	GS0362
90275080	GS0362
90275102	GS0361
90341282	GS0076
90341377	GS0155
90341378	GS0124
90346469	GS0363
90379054	GS0209
90379081	GS0102
90388707	GS0143
90463253	GS0177

O.E.	MAGNETI MARELLI
OPEL	
90463721	GS0084
90463749	GS0081
90463781	GS0416
90481180	GS0364
90481269	GS0241
90481270	GS0053
90486893	GS0994
90521517	GS0165
90559245	GS0137
90579440	GS0136
9114311	GS0119
91163328	GS0993
91168256	GS0517
91168256	GS0517
9152393	GS0256
9177081	GS0337
9180255	GS0839
9180256	GS0882
9209569	GS0087
9209570	GS0088
9210307	GS0087
9210308	GS0088
93193386	GS1034
93386999	GS0118
96661403	GS0939
96664104	GS0995
96830123	GS0939
97211748	GS0664
PAZ (ПАЗ)	
21086308010	GS0113
PEUGEOT	
0347040	GS0472
51023704	GS0145
5802A007	GS0841
5802A008	GS0841
689500H010	GS0753
689500H020	GS0753
7000510263E0	GS0721
7145009000	GS0723
7146009000	GS0723
7920062656	GS0066
7920071833	GS0360

O.E.	MAGNETI MARELLI
PEUGEOT	
792505	GS0575
792506	GS0267
792507	GS0518
792508	GS0471
792509	GS0266
792510	GS0471
792515	GS0159
792516	GS0853
862214	GS0617
862215	GS0620
8731	GS0112
873100000	GS0359
873143	GS0066
873148	GS0360
873149	GS0360
873151	GS0309
873178	GS0201
873179	GS0324
873183	GS0418
873185	GS0132
873186	GS0132
873191	GS0133
873193	GS0147
8731A1	GS0314
8731A2	GS0321
8731A3	GS0618
8731A7	GS0178
8731C1	GS0619
8731C5	GS0317
8731C9	GS0472
8731E1	GS0424
8731E6	GS0145
8731E9	GS0181
8731F2	GS0339
8731F8	GS0417
8731F9	GS0354
8731G4	GS0336
8731G5	GS0470
8731G6	GS0340
8731G9	GS0354
8731H8	GS0454
8731J3	GS0796
8731J6	GS0794

O.E.	MAGNETI MARELLI
PEUGEOT	
8731K4	GS0793
8731K5	GS0795
8731L0	GS0753
8731L7	GS0797
8731P8	GS0799
8731P9	GS0798
8731Q0	GS0798
8731Q1	GS0841
8731Q5	GS0721
8731Q6	GS0800
8731Q7	GS0723
8731S7	GS0918
9252344980	GS0617
9255607980	GS0620
9256119680	GS0020
9601430480	GS0178
9601430480	GS0418
9602673980	GS0575
9603762280	GS0201
9603762380	GS0324
9605478880	GS0132
9605478888	GS0132
9610016680	GS0147
9612504980	GS0178
9612504980	GS0418
9617046480	GS0321
9619988380	GS0147
9622165080	GS0314
9624450980	GS0424
9626771680	GS0317
9628157780	GS0471
9629219580	GS0266
9630662480	GS0471
9636450380	GS0181
9637115080	GS0339
9638605280	GS0417
9641721980	GS0454
9642209980	GS0470
9642210080	GS0336
9647261480	GS0793
9647487680	GS0794
9647487880	GS0795
9649587680	GS0796

O.E.	MAGNETI MARELLI
PEUGEOT	
9656592980	GS0793
9656593180	GS0795
9683422380	GS0722
PORSCHE	
7L5823359	GS0976
7L5845587B	GS0975
91151233101	GS0587
91151233102	GS0586
95551135900	GS0976
95551252800	GS0975
98651255101	GS0999
98751255101	GS1006
98751255103	GS1016
98751255104	GS1016
98751255105	GS1006
98751255106	GS1016
98751255107	GS1016
99351133100	GS0974
99651155101	GS0999
99651155101	GS1000
99751155101	GS0868
99751255100	GS0869
RENAULT	
32062565	GS0791
6025001988	GS0622
6025003919	GS0622
6025005935	GS0318
6025006621	GS0318
6025100991	GS0545
6025101952	GS0311
6025106762	GS0312
6025300735	GS0227
6025305941	GS0228
6025306563	GS0229
6025401711	GS0347
7700272026	GS0092
7700303139	GS0127
7700303186	GS0127
7700413083	GS0477
7700414002	GS0478
7700418621	GS0157
7700421906	GS0154

O.E.	MAGNETI MARELLI
RENAULT	
7700430022	GS0152
7700434465	GS0151
7700753540	GS0626
7700785587	GS0625
7700786247	GS0004
7700786248	GS0255
7700787749	GS0333
7700795698	GS0624
7700795731	GS0624
7700799026	GS0004
7700799027	GS0255
7700800311	GS0092
7700807057	GS0313
7700810554	GS0253
7700811019	GS0553
7700811570	GS0308
7700812193	GS0325
7700815135	GS0329
7700815135	GS0621
7700818237	GS0093
7700823271	GS0278
7700824817	GS0552
7700828451	GS0130
7700828454	GS0129
7700829764	GS0278
7700829825	GS0554
7700831959	GS0553
7700832534	GS0554
7700838005	GS0378
7700838006	GS0546
7700838487	GS0527
7700838612	GS0180
7700838690	GS0527
7700842152	GS0278
7700842153	GS0278
7700842256	GS0240
7700843698	GS0130
7700846772	GS0543
7700846773	GS0544
7700848404	GS0751
7700848464	GS0751
7701033344	GS0548
7701057303	GS0927

O.E.	MAGNETI MARELLI
RENAULT	
7702144629	GS0021
7702149568	GS0623
7703024021	GS0547
8200000896	GS0547
8200000902	GS0188
8200000903	GS0433
8200003020	GS0189
8200021974	GS0519
8200021975	GS0520
8200025105	GS0550
8200025317	GS0475
8200051750	GS0211
8200091749	GS0473
8200119497	GS0854
8200119498	GS0476
8200119498	GS0367
8200119500	GS0476
8200130187	GS0551
8200130187	GS0551
8200135264	GS0877
8200162697	GS0549
8200174571	GS0891
8200212598	GS0893
8200212598	GS0367
8200212598	GS0476
8200219322	GS0790
8200219323	GS1037
8200299546	GS0791
8200362400	GS0474
8200377199	GS0891
8200377789	GS0476
8200385560	GS0925
8200461349	GS1037
8200497806	GS1035
8200583852	GS0693
844300001R	GS0696
844300004R	GS0697
844300009R	GS0913
8453460	GS0790
8489348	GS0891
904505599R	GS1036
904510001R	GS0694
904510002R	GS0695

O.E.	MAGNETI MARELLI
RENAULT	
904513981R	GS1036
904600001R	GS0698
E84827465A	GS0927
ROVER	
74820SK3E20	GS0509
AFP1282	GS0041
BEP6628	GS0358
BHE38017	GS0509
BHE38017	GS0627
BHE38025	GS0191
BHE39005	GS0207
BHE39006	GS0208
BHE41003	GS0379
BHE41004	GS0379
BHE45001	GS0426
BHE450030	GS0880
BHE450030	GS0388
BHE450030	GS0426
BHE500050	GS0405
BHM410040	GS0334
BKK41003	GS0355
BKK500010	GS1025
BMH38003	GS1038
BMH38004	GS1038
BMH500010	GS0404
GSA922	GS0207
GSA923	GS0208
GSA925	GS0191
GSA930	GS0627
GTS120	GS0191
GTS122	GS0509
GTS122	GS0627
SAAB	
4006060	GS0556
4006078	GS0496
4323994	GS0346
4323994	GS0629
4324307	GS0395
4326468	GS0394
4699260	GS0630
4854717	GS0370
4854733	GS0370

O.E.	MAGNETI MARELLI
SAAB	
4855094	GS0557
4858627	GS0396
5022082	GS0391
5117015	GS0557
5183017	GS0345
5360839	GS0557
6956262	GS0499
6956270	GS0500
6956288	GS0495
6976369	GS0497
9231796	GS0604
9233727	GS0604
9253964	GS0498
9270240	GS0555
9293580	GS0628
12778556	GS0923
12785021	GS0855
12785021	GS0941
12797509	GS0923
12831543	GS0832
127850021	GS0855
1012831543	GS0832
SEAT	
1L0827550	GS0123
1L0827550A	GS0123
1M0823359A	GS0338
1M5827550B	GS0192
1M6827550A	GS0179
1P0827550	GS0833
1P0827550A	GS0833
4B9827552J	GS0512
5P0827550A	GS0099
5P5827550	GS0576
5P8827550	GS0908
6J3827550	GS0916
6J4827550	GS0917
6J4827550B	GS0917
6K0827550	GS0099
6K0827550A	GS0099
6K5827550	GS0062
6K5827550C	GS0258
6K6827550	GS0139
6K6827550A	GS0210

O.E.	MAGNETI MARELLI
SEAT	
6L5827550B	GS0843
6L6827550B	GS0224
6X0827550	GS0283
6X0827550A	GS0283
7M0827550D	GS0126
7M0827550F	GS0126
7M0827550G	GS0126
7M3827550A	GS0481
8L0823359	GS0283
SE021526200A	GS0022
SE02252620A	GS0011
SE028526200B	GS0016
SE14523200A	GS0016
W06K5827550	GS0062
W06K6827550	GS0139
W1L0827550	GS0123
XO39303770	GS0042
XO39401990	GS0010
XO39440480	GS0011
XO39462450	GS0011
XO39481770	GS0601
XO39503120	GS0022
XO39507910	GS0022
XO39553290	GS0016
XO42977420	GS0015
XO44836580	GS0016
SKODA	
1U6827550	GS0216
1U6827550A	GS0216
1U6827550B	GS0216
1U6827550C	GS0216
1U6827550E	GS0217
1U6827550F	GS0218
1U6827550G	GS0219
1U6827550H	GS0220
1U9827550A	GS0044
1U9827550B	GS0044
1Z5827550	GS0730
1Z5827550B	GS0730
1Z5827550C	GS0730
1Z5827550D	GS0730
1Z5827550E	GS0730
1Z5827550F	GS0730

O.E.	MAGNETI MARELLI
SKODA	
1Z9827550	GS0732
3B5827550E	GS0432
3T0823359	GS0686
3T5827550	GS0687
3T5827552	GS0920
3U0823359	GS0834
41964420476	GS0047
441564420066	GS0036
441664420076	GS0037
441664420086	GS0056
441964420476	GS0047
441964420476	GS0060
441964420486	GS0060
441964920386	GS0005
5J6827550B	GS0746
5J7827550	GS0747
6U0827551A	GS0047
6U0827551A	GS0060
6U0827551B	GS0047
6U0827551B	GS0060
6Y0827550A	GS0173
6Y5827550A	GS0134
SMART	
0000618V007	GS0633
0009223V	GS0878
0009223V005	GS0878
113000013	GS0633
2217500216	GS0878
2217500236	GS0878
A4519880004	GS1011
A4547400145	GS0929
Q0009223V003000000	GS0878
Q0009235V004000000	GS0904
Q0009235V005000000	GS0904
SSANGYONG	
7115008100	GS0351
7140608100	GS0332
7140608110	GS0332
7141608100	GS0332
7141608110	GS0332
7143608100	GS0352

O.E.	MAGNETI MARELLI
SUBARU	
60315FA010	GS0885
60335FA000	GS0885
60335FA100	GS0885
60335FA120	GS0885
63269FE000	GS0884
68950B1031	GS0966
68960B1031	GS0966
SUZUKI	
8185083	GS0087
8185084	GS0087
8186083	GS0088
8186084	GS0088
8180062831	GS0090
8180062841	GS0091
8180063811	GS1039
8180162811000	GS1039
8185062B20	GS0090
8185062J00	GS1039
8185086G00000	GS0845
8185086G00X10	GS0845
81850M76G20A	GS0581
81850M76G20A	GS0581
81850M76G20A	GS0581
8185185C00	GS0972
8186062B20	GS0091
8186086G00000	GS0845
81860A80100	GS0493
81860A80100	GS0493
81860A80100	GS0493
81860A80100	GS0493
81860A80100	GS0493
81860A80100	GS0493
81860A80100	GS0493
81860M70F10000	GS0581
81860M70F10000	GS0581
81860M70F10000	GS0581
81860M76G20A	GS0581
81860M76G20A	GS0581
81860M76G20A	GS0581
9390085C00	GS0494
TOYOTA	
6894005072	GS0765

O.E.	MAGNETI MARELLI
TOYOTA	
6895002020	GS0957
6895002020	GS0958
6895002030	GS0958
6895002040	GS0486
6895002091	GS1040
6895005010	GS1001
6895005020	GS1001
6895005060	GS0765
6895009050	GS0584
6895009080	GS0584
6895009090	GS0957
6895009090	GS0958
6895009100	GS0958
6895009110	GS0886
6895009140	GS0765
6895009150	GS0765
6896002010	GS0957
6896002010	GS0958
6896002020	GS0958
6896002030	GS0486
6896002081	GS1040
6896005060	GS0765
6896005072	GS0765
6896009050	GS0584
6896009060	GS0957
6896009060	GS0958
6896009080	GS0584
6896009090	GS0765
6896009100	GS0765
6896009120	GS0886
689500D020	GS0842
689500D021	GS0842
689500D022	GS0842
689500F010	GS0731
689500F011	GS0731
689500F012	GS0731
689500W101	GS0167
689500W101	GS0634
689500W140	GS0487
689500W170	GS0486
689500W251	GS0959
689600D010	GS0842
689600D011	GS0842

O.E.	MAGNETI MARELLI
TOYOTA	
689600D012	GS0842
689600F010	GS0731
689600F011	GS0731
689600F012	GS0731
689600W091	GS0167
689600W091	GS0634
689600W140	GS0487
689600W170	GS0486
689600W240	GS0959
8731K2,8731K1	GS0958
TWEKS(ТВЭКС)	
21086308015	GS0024
UAZ	
21216308015	GS0025
VAUXHALL	
1178224	GS0341
1180402	GS0084
13101335	GS0342
13128759	GS0788
13191401	GS0882
13241974	GS0839
13247868	GS0882
132670	GS0119
132675	GS0102
132677	GS0165
132681	GS0256
132682	GS0392
132691	GS0342
132693	GS0385
132701	GS0384
132702	GS0242
132703	GS0243
132704	GS0031
132708 (without speakers)	GS0402
132709	GS0402
132710	GS0401
132715	GS0257
132716	GS0032
132717	GS0363
132718	GS0241

O.E.	MAGNETI MARELLI
VAUXHALL	
132719	GS0124
132720	GS0155
132721	GS0076
132724	GS0053
132725	GS0143
132726	GS0364
132727	GS0081
132734	GS0899
132735 (without wiper)	GS0401
132739	GS0137
132741	GS0166
132742	GS0136
132749	GS0788
176387	GS0177
176601	GS0362
176602	GS0362
176603	GS0361
176605	GS0209
176607	GS0337
176608	GS0839
176608	GS0839
176608	GS0839
176609	GS0882
24411022	GS0166
24454473	GS0341
4705436	GS0087
4705437	GS0088
4705684	GS0087
4705685	GS0088
5132262	GS0118
90043132	GS0392
90158125	GS0385
90159607	GS0031
90191627	GS0243
90191920	GS0242
90195260	GS0384
90196023	GS0899
90227934	GS0257
90227936	GS0032
90241995 (without wiper)	GS0401
90241996	GS0401
90246620 (without speakers)	GS0402
90246621	GS0402

O.E.	MAGNETI MARELLI
VAUXHALL	
90275073	GS0362
90275080	GS0362
90275102	GS0361
90341282	GS0076
90341377	GS0155
90341378	GS0124
90346469	GS0363
90379054	GS0209
90379081	GS0102
90388707	GS0143
90463253	GS0177
90463721	GS0084
90463749	GS0081
90481180	GS0364
90481269	GS0241
90481270	GS0053
90521517	GS0165
90559245	GS0137
90579440	GS0136
9114311	GS0119
9152393	GS0256
9177081	GS0337
9180255	GS0839
9180256	GS0882
9209569	GS0087
9209570	GS0088
9210307	GS0087
9210308	GS0088
93386999	GS0118
VOLVO	
1334648	GS0931
1355263	GS0310
1376115	GS0960
180084	GS0960
30634580	GS0419
30649439	GS0491
30649516	GS0726
30649736	GS0357
30649836	GS0727

O.E.	MAGNETI MARELLI
VOLVO	
30674203	GS0489
30674494	GS0750
30674718	GS0501
30674836	GS1041
30674971	GS0489
30716189	GS0501
30779837	GS0727
30803472	GS0182
30852059	GS0153
30852060	GS0153
31217640	GS1041
31218478	GS0792
31335795	GS1042
3344245	GS0635
3436644	GS0510
3436644	GS0562
3470348	GS0562
3470350	GS0510
3470350	GS0562
3509482	GS0529
3509482	GS0529
3526575	GS0343
3526575	GS0344
3529925	GS0344
6846014	GS0310
819865	GS0441
8600233	GS0482
8650233	GS0482
9154605	GS0636
9154605	GS0636
9154605	GS0636
9154605	GS0636
9159604	GS0936
9159605	GS0936
9187315	GS0529
9187315	GS0529
9187795	GS0936
9187796	GS0936
9483297	GS0490
9483299	GS0490
9483570	GS0792
9485546	GS0936
9485547	GS0936

O.E.	MAGNETI MARELLI
VOLVO	
9485548	GS0529
9485548	GS0529
9485706	GS0488
VOLKSWAGEN	
147827550	GS0563
171827550A	GS0072
1918827550	GS0565
1918827550A	GS0038
1C0823359B	GS0387
1C0823359C	GS0387
1C0823359D	GS0387
1C0827550A	GS0323
1C0827550B	GS0323
1C0827550C	GS0323
1C0827550D	GS0323
1E0827550	GS0740
1E0827550B	GS0740
1H5827550A	GS0225
1H5827550B	GS0225
1H6827550	GS0048
1H6827550A	GS0048
1H9827550A	GS0190
1J0823359	GS0260
1J6827550	GS0131
1J6827550C	GS0131
1J9827550	GS0131
1K0823359A	GS0801
1K5827550C	GS0817
1K6827550D	GS0184
1K8827550A	GS0689
1K9827550A	GS0820
1Q0823359	GS0804
1Q0827550A	GS0818
1Q0827550B	GS0818
1T0823359	GS0802
1T0823359A	GS0802
1T0827550A	GS0809
1T0827550B	GS0809
1T0827550C	GS0809
1T0827550D	GS0809
1T0827550E	GS0809
1Y0827550B	GS0856

O.E.	MAGNETI MARELLI
VOLKSWAGEN	
1Y0827550D	GS0856
1Y0827550F	GS0856
251829331	GS0105
251829331A	GS0105
251829331B	GS0638
251829332	GS0638
2K0827550	GS0816
2K0827550A	GS0816
333827550	GS0122
3A9827550	GS0122
3B0823359	GS0265
3B0823359B	GS0265
3B5827550	GS0134
3B5827550A	GS0134
3B5827550E	GS0432
3B9827550	GS0183
3C0823359	GS0894
3C0823359A	GS0894
3C5827550A	GS0895
3C5827550B	GS0895
3C5827550C	GS0895
3C8823359	GS0688
3C9827550	GS0896
3C9827550A	GS0896
4B9827552D	GS0511
4B9827552H	GS0511
4B9827552J	GS0512
533827550	GS0742
533827550A	GS0742
535827550A	GS0564
5K0823359D	GS0673
5K6827550B	GS0680
5M0827550	GS0857
5M0827550A	GS0857
5N0827550A	GS0902
5Z6827550B	GS0861
6E0827550B	GS0198
6E0827550C	GS0194
6K0827550	GS0099
6K0827550A	GS0099
6K5827550A	GS0062
6N0823359	GS0264
6N0827550A	GS0144

O.E.	MAGNETI MARELLI
VOLKSWAGEN	
6Q0823359	GS0492
6Q0823359A	GS0492
6Q5827550A	GS0814
6Q5827550B	GS0814
6Q6827550	GS0193
6Q6827550	GS0195
6Q6827550A	GS0195
6X0823359A	GS0194
6X0823359B	GS0286
6X0823359C	GS0335
6X0827550	GS0260
6X0827550A	GS0260
701829331AB	GS0249
701829331F	GS0244
701829331G	GS0245
701829331H	GS0104
701829331J	GS0246
701829331Q	GS0117
701829331R	GS0248
701829331S	GS0250
701829331T	GS0247
7827550A	GS0637
7D0823359A	GS0752
7H0823359A	GS0897
7H0823359B	GS0897
7H0823359C	GS0897
7H0827550	GS0566
7H0827550B	GS0567
7L6823359B	GS0353
7L6845587	GS0858
7L6845587A	GS0858
7M0823359G	GS0126
7M0827550D	GS0126
7M0827550F	GS0126
7M0827550G	GS0126
7M3827550A	GS0481
867827550	GS0637
867827550C	GS0175
867827550D	GS0176
8J0823359	GS0260
8J0823359A	GS0260
8J0823359C	GS0263
8L0823359	GS0260
8P3827552D	GS0461

O.E.	MAGNETI MARELLI
ZASTAWA	
46622166	GS0096
46635997	GS0008
46636020	GS0028
46636021	GS0028
46636022	GS0029
ZAZ	
126308506	GS0114
136308506	GS0035
1216308506	GS0071
1326308506	GS0115
11026308016	GS0035

Molle a gas - Tavole di comparazione 2
Gas springs - Cross reference guide 2
Gasfedern - Gegenuberstellung 2
Vérins de Hayons - Table de correspondance 2
Resortes de gas - Tabla de equivalencias 2
Molas de gas - Tabela de equivalencias 2
Αμορτισέρ μπαγκάζ - Πινακας αντιστοιχιων 2
Sprężyny gazowe - Tabela porównawcza 2
Газовые упоры - Таблица переходов 2
Gazlı amortisörler - Çapraz referans tablosu 2

BUGIAD	MAGNETI MARELLI
DELPHI	MAGNETI MARELLI
LESJÖFORS	MAGNETI MARELLI
LIPMESA	MAGNETI MARELLI
QUINTON HAZELL	MAGNETI MARELLI
STABILUS	MAGNETI MARELLI

BUGIAD	MAGNETI MARELLI
BGS11005	GS0815
BGS11028	GS0733
BGS11076	GS0762
BGS11080	GS0841
BGS11139	GS0822
BGS11143	GS0685
BGS10001	GS0968
BGS10030	GS0744
BGS10104	GS1043
BGS10202	GS0986
BGS10207	GS0955
BGS10240	GS0899
BGS10241	GS0898
BGS10273	GS0675
BGS10375	GS0972
BGS10499	GS0924
BGS10516	GS0931
BGS10536	GS0743
BGS10622	GS0901
BGS10629	GS0936
BGS10643	GS0991
BGS10703	GS0890
BGS10704	GS0994
BGS10741	GS0748
BGS10766	GS0874
BGS10780	GS0751
BGS10785	GS0928
BGS10786	GS0907
BGS10792	GS0977
BGS10799	GS0740
BGS10802	GS0750
BGS10805	GS0958
BGS10833	GS0764
BGS10838	GS0930
BGS10839	GS0933
BGS10842	GS0978
BGS10856	GS0881
BGS10888	GS0957
BGS10888	GS0957
BGS10888	GS0958
BGS10899	GS0886
BGS10901	GS0906
BGS10904	GS0911
BGS10904	GS0912

BUGIAD	MAGNETI MARELLI
BGS10917	GS0735
BGS10920	GS0756
BGS10921	GS0754
BGS10922	GS0736
BGS10923	GS0759
BGS10924	GS0835
BGS10925	GS0760
BGS10926	GS0669
BGS10928	GS0757
BGS10929	GS0670
BGS10934	GS0768
BGS10956	GS0739
BGS10972	GS0839
BGS10990	GS0755
BGS10991	GS0758
BGS10992	GS0734
BGS10993	GS0787
BGS10994	GS0870
BGS10995	GS0786
BGS10996	GS0882
BGS10997	GS0788
BGS11000	GS0783
BGS11003	GS0851
BGS11004	GS0729
BGS11006	GS0811
BGS11007	GS0813
BGS11008	GS0810
BGS11009	GS0812
BGS11010	GS0803
BGS11011	GS0852
BGS11014	GS0832
BGS11015	GS0855
BGS11015	GS0941
BGS11016	GS0801
BGS11017	GS0802
BGS11021	GS0809
BGS11025	GS0943
BGS11026	GS0934
BGS11027	GS0700
BGS11029	GS0847
BGS11029	GS0889
BGS11030	GS0860
BGS11036	GS0825
BGS11037	GS0772

BUGIAD	MAGNETI MARELLI
BGS11038	GS0769
BGS11039	GS0784
BGS11040	GS0782
BGS11041	GS0724
BGS11042	GS0725
BGS11044	GS0892
BGS11045	GS0872
BGS11047	GS0793
BGS11048	GS0853
BGS11049	GS0794
BGS11050	GS0795
BGS11051	GS0791
BGS11056	GS0854
BGS11057	GS0891
BGS11060	GS0843
BGS11061	GS0833
BGS11063	GS0730
BGS11064	GS0732
BGS11065	GS0834
BGS11066	GS0747
BGS11067	GS0686
BGS11068	GS0746
BGS11068	GS0746
BGS11069	GS0842
BGS11070	GS0861
BGS11071	GS0817
BGS11072	GS0895
BGS11073	GS0896
BGS11074	GS0858
BGS11075	GS0857
BGS11076	GS0762
BGS11077	GS0893
BGS11078	GS0790
BGS11079	GS0753
BGS11081	GS0939
BGS11081	GS0997
BGS11082	GS0763
BGS11083	GS0946
BGS11085	GS0765
BGS11086	GS0731
BGS11088	GS0767
BGS11089	GS0850
BGS11090	GS0836
BGS11092	GS0770

BUGIAD	MAGNETI MARELLI
BGS11092	GS0862
BGS11093	GS0838
BGS11094	GS0780
BGS11095	GS0859
BGS11097	GS0781
BGS11098	GS0785
BGS11099	GS0871
BGS11101	GS0796
BGS11102	GS0804
BGS11103	GS0805
BGS11104	GS0806
BGS11105	GS0807
BGS11106	GS0818
BGS11107	GS0840
BGS11108	GS0819
BGS11109	GS0820
BGS11111	GS0826
BGS11112	GS0829
BGS11113	GS0830
BGS11114	GS0831
BGS11115	GS0849
BGS11116	GS0823
BGS11117	GS0856
BGS11120	GS0979
BGS11124	GS0837
BGS11125	GS0692
BGS11126	GS0909
BGS11127	GS1012
BGS11128	GS0945
BGS11129	GS1045
BGS11130	GS0699
BGS11131	GS0701
BGS11135	GS0848
BGS11137	GS0965
BGS11140	GS0821
BGS11141	GS0679
BGS11141	GS0683
BGS11142	GS0958
BGS11143	GS1044
BGS11144	GS0926
BGS11145	GS0677
BGS11146	GS0678
BGS11147	GS0682
BGS11149	GS0964

BUGIAD	MAGNETI MARELLI
BGS11150	GS0681
BGS11150	GS0937
BGS11152	GS0950
BGS11153	GS0708
BGS11153	GS0951
BGS11154	GS0949
BGS11155	GS1003
BGS11156	GS0953
BGS11157	GS0712
BGS11158	GS0713
BGS11160	GS0707
BGS11161	GS0985
BGS11162	GS0828
BGS11163	GS0940
BGS11166	GS0717
BGS11169	GS0903
BGS11170	GS0789
BGS11171	GS0779
BGS11173	GS0778
BGS11174	GS0888
BGS11175	GS0773
BGS11176	GS0771
BGS11178	GS0954
BGS11179	GS0942
BGS11181	GS0706
BGS11185	GS0981
BGS11186	GS0980
BGS11187	GS0971
BGS11189	GS0745
BGS11190	GS0883
BGS11191	GS0863
BGS11192	GS0864
BGS11193	GS1022
BGS11195	GS0956
BGS11197	GS0728
BGS11199	GS0800
BGS11201	GS0799
BGS11202	GS0798
BGS11203	GS0918
BGS11204	GS0723
BGS11206	GS0722
BGS11207	GS0761
BGS11209	GS0974
BGS11210	GS1000

BUGIAD	MAGNETI MARELLI
BGS11212	GS0868
BGS11213	GS1006
BGS11214	GS0999
BGS11215	GS0975
BGS11216	GS0976
BGS11217	GS0693
BGS11222	GS1035
BGS11223	GS0696
BGS11224	GS0697
BGS11225	GS0927
BGS11226	GS0694
BGS11229	GS0925
BGS11230	GS0908
BGS11231	GS0917
BGS11232	GS0916
BGS11233	GS0929
BGS11234	GS1011
BGS11238	GS0959
BGS11239	GS1040
BGS11240	GS0792
BGS11243	GS0816
BGS11244	GS0894
BGS11246	GS0680

DELPHI	MAGNETI MARELLI
PLHGS10000	GS0001
PLHGS10004	GS0002
PLHGS10006	GS0003
PLHGS10007	GS0004
PLHGS10009	GS0005
PLHGS10012	GS0006
PLHGS10023	GS0007
PLHGS10025	GS0008
PLHGS10026	GS0009
PLHGS10027	GS0010
PLHGS10028	GS0011
PLHGS10029	GS0012
PLHGS10030	GS0013
PLHGS10031	GS0014
PLHGS10032	GS0015
PLHGS10033	GS0016
PLHGS10034	GS0017
PLHGS10035	GS0018
PLHGS10036	GS0019
PLHGS10037	GS0020
PLHGS10038	GS0021
PLHGS10039	GS0022
PLHGS10040	GS0023
PLHGS10041	GS0024
PLHGS10042	GS0025
PLHGS10043	GS0026
PLHGS10044	GS0027
PLHGS10045	GS0028
PLHGS10046	GS0029
PLHGS10047	GS0030
PLHGS10052	GS0031
PLHGS10053	GS0032
PLHGS10054	GS0033
PLHGS10055	GS0034
PLHGS10056	GS0035
PLHGS10058	GS0036
PLHGS10065	GS0037
PLHGS10068	GS0038
PLHGS10070	GS0039
PLHGS10071	GS0040
PLHGS10072	GS0041
PLHGS10073	GS0042
PLHGS10074	GS0043
PLHGS10080	GS0044

DELPHI	MAGNETI MARELLI
PLHGS10081	GS0045
PLHGS10085	GS0046
PLHGS10087	GS0047
PLHGS10089	GS0048
PLHGS10095	GS0049
PLHGS10097	GS0050
PLHGS10100	GS0051
PLHGS10102	GS0052
PLHGS10104	GS0053
PLHGS10106	GS0054
PLHGS10110	GS0056
PLHGS10118	GS0057
PLHGS10119	GS0058
PLHGS10128	GS0059
PLHGS10129	GS0060
PLHGS10133	GS0061
PLHGS10137	GS0062
PLHGS10148	GS0066
PLHGS10149	GS0067
PLHGS10150	GS0068
PLHGS10151	GS0071
PLHGS10154	GS0072
PLHGS10157	GS0073
PLHGS10158	GS0074
PLHGS10162	GS0075
PLHGS10163	GS0076
PLHGS10165	GS0077
PLHGS10166	GS0078
PLHGS10170	GS0079
PLHGS10174	GS0080
PLHGS10175	GS0081
PLHGS10180	GS0084
PLHGS10183	GS0085
PLHGS10184	GS0086
PLHGS10188	GS0089
PLHGS10194	GS0092
PLHGS10195	GS0093
PLHGS10196	GS0094
PLHGS10197	GS0095
PLHGS10199	GS0097
PLHGS10200	GS0098
PLHGS10203	GS0099
PLHGS10204	GS0101
PLHGS10206	GS0102

DELPHI	MAGNETI MARELLI
PLHGS10207	GS0103
PLHGS10208	GS0104
PLHGS10209	GS0105
PLHGS10214	GS0106
PLHGS10215	GS0107
PLHGS10216	GS0108
PLHGS10217	GS0109
PLHGS10218	GS0110
PLHGS10220	GS0112
12886	GS0501
128003	GS0597
128052	GS0466
128056	GS0592
128071	GS0617
128074	GS0502
128074	GS0601
128075	GS0637
128076	GS0577
128078	GS0591
128083	GS0493
128086	GS0594
128087	GS0602
128088	GS0632
128089	GS0464
128090	GS0465
128096	GS0625
128097	GS0623
128098	GS0593
128099	GS0596
128108	GS0598
128119	GS0624
128124	GS0565
128152	GS0552
128153	GS0621
128170	GS0574
128252	GS0635
128257	GS0453
128261	GS0608
128262	GS0609
128282	GS0538
128299	GS0528
128324	GS0455
128324	GS0618
128325	GS0457

DELPHI	MAGNETI MARELLI
128325	GS0619
128342	GS0543
128343	GS0544
128350	GS0525
128351	GS0526
128354	GS0507
128379	GS0553
128380	GS0437
128381	GS0506
128389	GS0589
128407	GS0572
128412	GS0539
128413	GS0438
128416	GS0530
128417	GS0531
128422	GS0509
128422	GS0627
128428	GS0620
128431	GS0605
128438	GS0532
128447	GS0603
128450	GS0538
128451	GS0494
128498	GS0490
128499	GS0451
128515	GS0467
128527	GS0533
128533	GS0563
128539	GS0482
128542	GS0541
128570	GS0443
128571	GS0479
128571	GS0614
128573	GS0463
128580	GS0610
128586	GS0503
128589	GS0571
128592	GS0508
128593	GS0447
128593	GS0514
128596	GS0560
128598	GS0516
128599	GS0495
128604	GS0477

DELPHI	MAGNETI MARELLI
128605	GS0478
128607	GS0475
128619	GS0585
128620	GS0481
128624	GS0564
128630	GS0562
128633	GS0458
128638	GS0626
128639	GS0548
128642	GS0554
128645	GS0628
128658	GS0439
128662	GS0534
128669	GS0459
128671	GS0444
128672	GS0468
128686	GS0442
128696	GS0578
128697	GS0599
128699	GS0584
128699	GS0584
128705	GS0492
128706	GS0470
128711	GS0462
128715	GS0535
128719	GS0450
128720	GS0238
128729	GS0488
128732	GS0469
128734	GS0629
128736	GS0484
128737	GS0485
128738	GS0483
128741	GS0448
128747	GS0561
128751	GS0607
128756	GS0573
128763	GS0575
128767	GS0557
128775	GS0537
128785	GS0480
128785	GS0615
128788	GS0486
128789	GS0487

DELPHI	MAGNETI MARELLI
128790	GS0634
128793	GS0536
128805	GS0454
128806	GS0461
128808	GS0460
128810	GS0513
128826	GS0542
128843	GS0580
128851	GS0497
128852	GS0496
128853	GS0556
128854	GS0498
128855	GS0499
128856	GS0500
128860	GS0581
128862	GS0510
128865	GS0638
128880	GS0491
128883	GS0441
128885	GS0471
128887	GS0489
128889	GS0540
128897	GS0476
128900	GS0473
128901	GS0474
140021	GS0555
140046	GS0505
140074	GS0600
140075	GS0504
140080	GS0545
140084	GS0622
140114	GS0518
140115	GS0472
140116	GS0449
140124	GS0527
140126	GS0547
140130	GS0512
140131	GS0511
140145	GS0546
140157	GS0445
140158	GS0522
140176	GS0529
140181	GS0523
140184	GS0446

DELPHI	MAGNETI MARELLI
140185	GS0521
140186	GS0582
140187	GS0524
140190	GS0452
140197	GS0590
140238	GS0633
140239	GS0612
140240	GS0613
140260	GS0517
140260	GS0549
140262	GS0630
140299	GS0636
140300	GS0558
140301	GS0559
140303	GS0570
140304	GS0579
140305	GS0616
140310	GS0604
140312	GS0569
140313	GS0568
140320	GS0519
140321	GS0520
140322	GS0550
140324	GS0515
140325	GS0566
140326	GS0567
140327	GS0576
140334	GS0606

LESJÖFORS	MAGNETI MARELLI
128002	GS0011
128002	GS0011
128007	GS0015
128007	GS0015
128007	GS0015
128022	GS0019
128024	GS0010
128029	GS0042
128029	GS0042
128053	GS0023
128062	GS0010
128062	GS0034
128062	GS0010
128062	GS0010
128062	GS0010
128062	GS0010
128065	GS0019
128066	GS0022
128069	GS0009
128069	GS0011
128069	GS0011
128069	GS0011
128069	GS0011
128069	GS0011
128070	GS0021
128073	GS0251
128092	GS0038
128092	GS0038
128106	GS0146
128106	GS0146
128106	GS0146
128113	GS0016
128113	GS0016
128113	GS0016
128113	GS0016
128114	GS0017
128118	GS0201
128123	GS0004
128131	GS0308
128132	GS0092
128133	GS0140
128134	GS0141
128135	GS0033
128140	GS0040

LESJÖFORS	MAGNETI MARELLI
128140	GS0040
128140	GS0111
128141	GS0014
128146	GS0254
128147	GS0093
128148	GS0123
128149	GS0139
128150	GS0062
128150	GS0062
128153	GS0329
128155	GS0105
128156	GS0064
128157	GS0032
128157	GS0032
128158	GS0170
128159	GS0171
128160	GS0160
128160	GS0160
128161	GS0076
128161	GS0076
128161	GS0076
128162	GS0132
128178	GS0078
128179	GS0043
128180	GS0281
128182	GS0041
128182	GS0041
128183	GS0063
128185	GS0147
128190	GS0265
128190	GS0265
128190	GS0265
128191	GS0134
128191	GS0134
128191	GS0134
128191	GS0134
128191	GS0134
128191	GS0134
128223	GS0020
128244	GS0309
128245	GS0418
128249	GS0175
128254	GS0310
128254	GS0310

LESJÖFORS	MAGNETI MARELLI
128254	GS0310
128254	GS0310
128255	GS0394
128256	GS0395
128264	GS0039
128272	GS0079
128272	GS0079
128273	GS0252
128283	GS0292
128284	GS0293
128287	GS0041
128287	GS0041
128287	GS0041
128288	GS0207
128288	GS0207
128289	GS0285
128290	GS0199
128291	GS0200
128293	GS0304
128294	GS0242
128294	GS0242
128296	GS0401
128296	GS0401
128297	GS0155
128297	GS0124
128297	GS0155
128297	GS0124
128297	GS0155
128298	GS0384
128298	GS0384
128300	GS0072
128301	GS0122
128302	GS0176
128304	GS0311
128305	GS0312
128319	GS0421
128320	GS0075
128321	GS0178
128323	GS0148
128324	GS0282
128324	GS0302
128325	GS0303
128325	GS0303
128327	GS0125

LESJÖFORS	MAGNETI MARELLI
128335	GS0422
128335	GS0422
128336	GS0142
128337	GS0365
128338	GS0202
128339	GS0203
128340	GS0068
128341	GS0067
128344	GS0278
128347	GS0380
128347	GS0380
128348	GS0315
128349	GS0316
128352	GS0130
128353	GS0144
128353	GS0144
128356	GS0048
128357	GS0031
128357	GS0031
128358	GS0243
128358	GS0243
128362	GS0402
128362	GS0402
128363	GS0257
128363	GS0257
128365	GS0110
128365	GS0110
128366	GS0420
128366	GS0420
128367	GS0143
128367	GS0143
128368	GS0241
128368	GS0241
128369	GS0053
128369	GS0053
128371	GS0313
128372	GS0289
128372	GS0289
128373	GS0423
128374	GS0174
128375	GS0330
128375	GS0330
128376	GS0080
128376	GS0080

LESJÖFORS	MAGNETI MARELLI
128377	GS0102
128377	GS0102
128382	GS0225
128383	GS0196
128383	GS0196
128384	GS0209
128384	GS0209
128385	GS0314
128387	GS0077
128388	GS0135
128389	GS0138
128390	GS0158
128391	GS0261
128391	GS0149
128392	GS0081
128392	GS0081
128393	GS0416
128394	GS0283
128395	GS0099
128395	GS0099
128395	GS0099
128395	GS0099
128396	GS0153
128396	GS0153
128397	GS0182
128398	GS0319
128399	GS0320
128401	GS0424
128402	GS0317
128405	GS0322
128406	GS0425
128414	GS0271
128415	GS0270
128418	GS0273
128419	GS0272
128420	GS0426
128420	GS0426
128420	GS0426
128421	GS0191
128421	GS0191
128423	GS0128
128424	GS0427
128426	GS0381
128429	GS0024

LESJÖFORS	MAGNETI MARELLI
128429	GS0024
128429	GS0024
128429	GS0024
128429	GS0024
128429	GS0024
128429	GS0024
128430	GS0227
128432	GS0213
128433	GS0108
128434	GS0318
128435	GS0371
128436	GS0103
128439	GS0183
128440	GS0169
128441	GS0379
128442	GS0409
128444	GS0321
128445	GS0131
128445	GS0131
128445	GS0131
128445	GS0131
128446	GS0290
128448	GS0109
128449	GS0127
128449	GS0127
128457	GS0244
128458	GS0245
128459	GS0246
128460	GS0104
128500	GS0165
128500	GS0165
128501	GS0305
128502	GS0137
128502	GS0137
128503	GS0216
128504	GS0428
128505	GS0194
128506	GS0085
128507	GS0187
128510	GS0145
128511	GS0240
128512	GS0192
128513	GS0223
128514	GS0167

LESJÖFORS	MAGNETI MARELLI
128516	GS0136
128516	GS0136
128517	GS0410
128518	GS0161
128519	GS0163
128520	GS0185
128521	GS0233
128522	GS0237
128523	GS0238
128524	GS0372
128525	GS0119
128525	GS0119
128526	GS0429
128528	GS0222
128528	GS0222
128529	GS0044
128530	GS0253
128531	GS0179
128532	GS0383
128532	GS0383
128534	GS0323
128536	GS0404
128536	GS0404
128537	GS0430
128538	GS0112
128538	GS0112
128540	GS0431
128551	GS0300
128561	GS0301
128562	GS0219
128563	GS0217
128564	GS0218
128565	GS0173
128565	GS0173
128566	GS0164
128567	GS0159
128568	GS0432
128568	GS0432
128569	GS0221
128575	GS0215
128576	GS0214
128577	GS0386
128581	GS0385
128581	GS0385

LESJÖFORS	MAGNETI MARELLI
128581	GS0385
128582	GS0269
128583	GS0291
128584	GS0369
128585	GS0230
128588	GS0133
128591	GS0086
128594	GS0097
128594	GS0097
128595	GS0156
128597	GS0295
128600	GS0256
128600	GS0256
128601	GS0084
128601	GS0084
128602	GS0166
128602	GS0166
128603	GS0189
128606	GS0228
128606	GS0228
128608	GS0157
128610	GS0154
128611	GS0180
128612	GS0433
128613	GS0378
128614	GS0151
128614	GS0151
128615	GS0129
128615	GS0129
128615	GS0129
128616	GS0152
128617	GS0188
128618	GS0276
128621	GS0260
128621	GS0260
128621	GS0260
128621	GS0260
128621	GS0260
128622	GS0331
128622	GS0331
128625	GS0190
128626	GS0412
128626	GS0412
128628	GS0239

LESJÖFORS	MAGNETI MARELLI
128632	GS0324
128636	GS0066
128637	GS0255
128640	GS0325
128640	GS0325
128640	GS0325
128640	GS0325
128643	GS0333
128644	GS0334
128654	GS0393
128654	GS0393
128655	GS0328
128659	GS0259
128663	GS0434
128664	GS0262
128665	GS0212
128667	GS0279
128668	GS0280
128670	GS0411
128673	GS0205
128674	GS0168
128675	GS0288
128675	GS0288
128676	GS0150
128677	GS0210
128678	GS0258
128679	GS0337
128679	GS0337
128681	GS0195
128682	GS0224
128683	GS0197
128684	GS0067
128685	GS0206
128687	GS0208
128687	GS0208
128689	GS0181
128693	GS0220
128694	GS0336
128695	GS0204
128699	GS0226
128701	GS0268
128701	GS0268
128702	GS0338
128702	GS0338

LESJÖFORS	MAGNETI MARELLI
128703	GS0264
128704	GS0047
128704	GS0060
128707	GS0339
128708	GS0340
128708	GS0340
128709	GS0211
128709	GS0211
128710	GS0341
128710	GS0341
128710	GS0341
128710	GS0341
128712	GS0275
128714	GS0274
128720	GS0238
128720	GS0238
128722	GS0198
128722	GS0198
128723	GS0286
128724	GS0263
128724	GS0263
128725	GS0335
128726	GS0387
128727	GS0343
128727	GS0344
128728	GS0344
128728	GS0344
128731	GS0186
128733	GS0345
128734	GS0346
128735	GS0347
128740	GS0095
128740	GS0095
128744	GS0296
128745	GS0376
128746	GS0377
128748	GS0373
128749	GS0374
128750	GS0375
128752	GS0348
128753	GS0085
128754	GS0406
128755	GS0415
128757	GS0349

LESJÖFORS	MAGNETI MARELLI
128758	GS0350
128758	GS0350
128759	GS0351
128759	GS0351
128760	GS0332
128761	GS0352
128762	GS0353
128764	GS0267
128765	GS0266
128768	GS0370
128768	GS0370
128769	GS0391
128770	GS0435
128771	GS0398
128773	GS0100
128774	GS0436
128776	GS0121
128777	GS0390
128778	GS0366
128779	GS0400
128782	GS0356
128783	GS0118
128783	GS0118
128784	GS0405
128784	GS0405
128786	GS0388
128790	GS0167
128791	GS0342
128791	GS0342
128792	GS0354
128809	GS0232
128811	GS0184
128812	GS0193
128813	GS0231
128814	GS0287
128815	GS0294
128831	GS0306
128833	GS0307
128850	GS0355
128859	GS0047
128859	GS0060
128859	GS0047
128859	GS0060
128881	GS0419

LESJÖFORS	MAGNETI MARELLI
128881	GS0419
128882	GS0357
128884	GS0368
128888	GS0382
128892	GS0367
140024	GS0414
140121	GS0361
140121	GS0361
140121	GS0361
140121	GS0361
140122	GS0362
140122	GS0362
140122	GS0362
140122	GS0362
140123	GS0229
140123	GS0229
140127	GS0249
140135	GS0117
140136	GS0248
140137	GS0250
140138	GS0247
140144	GS0363
140144	GS0363
140154	GS0236
140155	GS0234
140156	GS0162
140165	GS0101
140170	GS0088
140170	GS0088
140170	GS0088
140171	GS0087
140171	GS0087
140171	GS0087
140177	GS0126
140177	GS0126
140177	GS0126
140177	GS0126
140180	GS0413
140191	GS0235
140193	GS0177
140193	GS0177
140194	GS0417
140239	GS0327
140239	GS0327

LESJÖFORS	MAGNETI MARELLI
140240	GS0326
140240	GS0326
140259	GS0364
140259	GS0364
106150	GS0937
8000700	GS0968
8000704	GS0762
8000705	GS0763
8000706	GS1023
8004209	GS0744
8004212	GS0743
8004218	GS0803
8004220	GS0807
8004222	GS0806
8004224	GS0945
8004225	GS0805
8008410	GS0754
8008412	GS0670
8008413	GS0755
8008414	GS0669
8008415	GS0963
8008415	GS0963
8008417	GS0835
8008418	GS0702
8008419	GS0943
8008420	GS1021
8014200	GS0996
8015604	GS0887
8026103	GS1043
8037201	GS0714
8037202	GS0714
8042101	GS0940
8042102	GS0718
8042103	GS0704
8044200	GS0772
8044201	GS0771
8056808	GS0981
8056809	GS0980
8056811	GS0979
8056812	GS0863
8056813	GS0864
8056814	GS0984
8056822	GS0876
8056824	GS0982

LESJÖFORS	MAGNETI MARELLI
8056825	GS0983
8058500	GS1024
8058500	GS1025
8058700	GS0671
8058701	GS1022
8063404	GS0786
8063405	GS0995
8063406	GS0728
8066703	GS0853
8069703	GS1000
8069704	GS0868
8069705	GS0976
8075701	GS0942
8075701	GS0942
8075702	GS0944
8075704	GS0948
8077805	GS0941
8077805	GS0855
8085700	GS0834
8085701	GS0686
8086000	GS0878
8095005	GS0801
8095006	GS0897
8095007	GS0802
8095011	GS0894
8095015	GS0804
8095017	GS0688
8095804	GS0726
8095805	GS0792
8100716	GS0946
8100717	GS0962
8100719	GS0764
8100720	GS0938
8100721	GS0961
8100722	GS0691
8100723	GS0692
8104222	GS0933
8104229	GS0815
8104230	GS0810
8104231	GS0812
8104232	GS0811
8104233	GS0813
8104235	GS0907
8104237	GS0819

LESJÖFORS	MAGNETI MARELLI
8104238	GS1045
8104240	GS0909
8104241	GS0663
8104242	GS0928
8104246	GS0681
8104247	GS0840
8104248	GS1015
8108407	GS0924
8108418	GS0756
8108419	GS0930
8108421	GS0757
8108422	GS0699
8108423	GS0760
8108424	GS0735
8108425	GS0736
8108426	GS0701
8108427	GS0700
8108428	GS0758
8108429	GS0761
8108430	GS0759
8108431	GS0934
8114200	GS0859
8114204	GS0780
8114205	GS0939
8114205	GS0997
8115637	GS0733
8115638	GS0889
8115639	GS0847
8115640	GS0958
8115641	GS0967
8115642	GS0848
8115644	GS0965
8115645	GS0821
8115647	GS1044
8115647	GS0685
8115648 (L)	GS0841
8115649 (R)	GS0841
8115650	GS0679
8115650	GS0683
8115652	GS0753
8115653	GS0822
8115656	GS0921
8115658	GS0684
8115659	GS1019

LESJÖFORS	MAGNETI MARELLI
8115660	GS1018
8115660	GS1019
8117000	GS0926
8117704	GS1027
8117704	GS0780
8117705	GS1027
8119112	GS0966
8126140	GS0768
8126141	GS0860
8126148	GS0849
8126150	GS0850
8126152	GS0844
8127540	GS0991
8127560	GS0729
8127561	GS0851
8127563	GS0837
8127564	GS0836
8127565	GS0964
8127566	GS0862
8127567	GS0862
8127568	GS0770
8127569	GS0838
8127571	GS0677
8127574	GS0969
8127575	GS0678
8127576	GS0682
8127577	GS0676
8135715 (R)	GS0949
8135716 (L)	GS0949
8135717	GS0852
8135729	GS0900
8135730	GS0950
8135731	GS0720
8135734	GS1028
8135735	GS1029
8135736	GS0708
8135736	GS0951
8137208	GS0881
8137217	GS0825
8137221	GS0985
8137222	GS0826
8137223	GS0828
8137234	GS0712
8137235	GS0713

LESJÖFORS	MAGNETI MARELLI
8137236	GS0952
8137237	GS0707
8142104	GS0717
8144209	GS0777
8144210	GS0775
8144211 (L)	GS0774
8144212 (R)	GS0774
8144213	GS0778
8144216	GS0773
8144217	GS0888
8144220	GS0954
8144224	GS0789
8144225	GS0789
8155420	GS0906
8155421	GS0905
8155422	GS0749
8155423	GS0748
8155426	GS0911
8155427	GS0912
8155436	GS0831
8155437	GS0829
8155437	GS0830
8155440	GS0706
8155442	GS1002
8155443	GS1002
8155444	GS0711
8155448	GS0705
8155450	GS0719
8155454	GS1031
8156802	GS0739
8156808	GS0782
8156810	GS0783
8156811 (L)	GS0784
8156812 (R)	GS0784
8156813 (do nr. podw.: T 084580, F229895)	GS0873
8156814 (od nr. podw.: T 084581, F229896)	GS0873
8156815 (L)	GS0871
8156816 (R)	GS0871
8156818	GS0973
8156819	GS0745
8156820	GS0883
8156821	GS0738
8156822	GS1032
8156824	GS0785

LESJÖFORS	MAGNETI MARELLI
8156826	GS0865
8156827	GS0866
8156828	GS0867
8156829	GS1004
8159217	GS0978
8159220	GS0823
8159220 (L)	GS0823
8159221 (P)	GS0823
8159222 (L)	GS0841
8159223 (P)	GS0841
8159224	GS0725
8159225	GS1033
8159228	GS0724
8162015	GS0986
8162028	GS0846
8162029	GS0766
8162040	GS0737
8162041	GS0767
8162042 (L; 03-)	GS0874
8162043 (P; 03-)	GS0874
8162044 (L; -03)	GS0874
8162045 (P; -03)	GS0874
8162046	GS0901
8162047	GS0956
8163420	GS0899
8163421	GS0898
8163446	GS0994
8163451	GS0839
8163451	GS0839
8163453	GS0787
8163454	GS0734
8163455	GS0882
8163460	GS0892
8163461	GS0872
8163462	GS0664
8163462	GS0890
8163464	GS0788
8163467	GS0870
8163470	GS0789
8163471	GS0915
8163472	GS0988
8166734	GS1044
8166735 (L)	GS0841
8166736 (R)	GS0841

LESJÖFORS	MAGNETI MARELLI
8166737	GS0753
8166739	GS0796
8166740	GS0794
8166741	GS0793
8166742	GS0795
8166744	GS0797
8166746	GS0918
8166747	GS0798
8166748	GS0800
8166749	GS0723
8166750	GS0723
8166753	GS0799
8166754	GS0721
8166755	GS0722
8166757	GS0684
8169705	GS0999
8169706	GS1006
8172933	GS0891
8172936	GS0791
8172940	GS0893
8172941	GS0877
8172942	GS0854
8172943	GS0790
8172944	GS1037
8172949	GS0693
8172950	GS1035
8172951	GS1036
8172952	GS0696
8172954	GS0697
8172955	GS0698
8172957	GS0694
8172958	GS0695
8172959	GS0913
8172962	GS0925
8172963	GS0926
8175713	GS1038
8175716	GS0675
8175717	GS0932
8175718	GS0935
8175721	GS0947
8177818	GS0832
8177822	GS0923
8182912	GS0843
8182915	GS0908

LESJÖFORS	MAGNETI MARELLI
8182916	GS0833
8182920	GS0917
8182921	GS0916
8185706	GS0746
8185707	GS0730
8185709	GS0732
8185712	GS0747
8185713	GS0687
8185716	GS0920
8186001	GS0904
8186002	GS0929
8188304	GS0885
8188305	GS0884
8188308	GS0966
8188910	GS0845
8188914	GS1039
8188915	GS1039
8188922	GS0844
8192547 (R)	GS0957
8192547 (R)	GS0958
8192548 (L)	GS0957
8192548 (L)	GS0958
8192549	GS0958
8192555 (R)	GS0886
8192556 (L)	GS0886
8192558	GS0765
8192561	GS0753
8192566	GS0731
8192569	GS1040
8192574	GS0842
8195020	GS0742
8195021	GS0742
8195032	GS0740
8195047	GS0809
8195050	GS0816
8195051	GS0861
8195053	GS0857
8195054	GS0820
8195055	GS0817
8195056	GS0896
8195057	GS0858
8195059	GS0895
8195062	GS0818
8195064	GS0673

LESJÖFORS	MAGNETI MARELLI
8195064	GS0680
8195067	GS0689
8195068	GS0902
8195811	GS0931
8195823	GS0936
8195825	GS0750
8195831	GS0727
8195832	GS1041
8195832	GS1042

LIPMESA	MAGNETI MARELLI
819582	GS0153
8000701	GS0599
8000702	GS0386
8000703	GS0444
8004200	GS0585
8004201	GS0331
8004206	GS0412
8004206	GS0412
8004207	GS0380
8004208	GS0380
8004210	GS0260
8004213	GS0134
8004213	GS0134
8004214	GS0265
8004215	GS0275
8004216	GS0381
8008401	GS0413
8008402	GS0590
8008403	GS0523
8008404	GS0591
8008404	GS0640
8008405	GS0640
8008406	GS0434
8008407	GS0414
8008408	GS0439
8008409	GS0262
8015600	GS0458
8015601	GS0269
8015602	GS0261
8015603	GS0462
8026100	GS0038
8026102	GS0442
8027500	GS0291
8027501	GS0328
8056800	GS0101
8056802	GS0430
8056803	GS0306
8056804	GS0307
8063402	GS0084
8063402	GS0084
8063403	GS0341
8063403	GS0341
8066700	GS0575
8066701	GS0471

LIPMESA	MAGNETI MARELLI
8075700	GS0355
8077601	GS0555
8077800	GS0629
8077800	GS0346
8077802	GS0345
8077804	GS0631
8082901	GS0338
8095000	GS0265
8095001	GS0387
8095002	GS0194
8095003	GS0286
8095004	GS0265
8095801	GS0441
8095802	GS0636
8100702	GS0272
8100707	GS0530
8100708	GS0531
8100709	GS0270
8100710	GS0271
8100711	GS0214
8100712	GS0435
8100713	GS0411
8100714	GS0221
8100715	GS0438
8104203	GS0409
8104204	GS0532
8104205	GS0371
8104206	GS0103
8104207	GS0429
8104209	GS0420
8104209	GS0420
8104210	GS0110
8104210	GS0110
8104211	GS0410
8104214	GS0134
8104215	GS0196
8104215	GS0196
8104219	GS0238
8104219	GS0237
8104221	GS0276
8104223	GS0450
8104224	GS0274
8104225	GS0365
8104226	GS0233

LIPMESA	MAGNETI MARELLI
8104226	GS0222
8104227	GS0226
8105800	GS0017
8108401	GS0451
8108402	GS0169
8108403	GS0445
8108404	GS0446
8108407	GS0439
8108409	GS0428
8108410	GS0452
8108410	GS0234
8108411	GS0162
8108412	GS0212
8108414	GS0524
8108416	GS0521
8108416	GS0582
8108417	GS0534
8114203	GS0447
8115600	GS0598
8115601	GS0592
8115602	GS0594
8115603	GS0595
8115604	GS0596
8115605	GS0453
8115606	GS0597
8115607	GS0600
8115608	GS0010
8115609	GS0011
8115611	GS0019
8115611	GS0019
8115612	GS0505
8115613	GS0506
8115614	GS0254
8115615	GS0033
8115616	GS0507
8115617	GS0011
8115618	GS0504
8115618	GS0202
8115618	GS0203
8115619	GS0422
8115620	GS0128
8115622	GS0112
8115623	GS0455
8115623	GS0618

LIPMESA	MAGNETI MARELLI
8115624	GS0457
8115624	GS0619
8115625	GS0456
8115625	GS0359
8115625	GS0359
8115626	GS0148
8115629	GS0427
8115630	GS0150
8115631	GS0535
8115632	GS0385
8117700	GS0086
8117701	GS0097
8117701	GS0097
8117702	GS0095
8117702	GS0095
8117706	GS0447
8126101	GS0015
8126101	GS0015
8126101	GS0041
8126102	GS0011
8126102	GS0011
8126104	GS0043
8126105	GS0073
8126106	GS0016
8126106	GS0016
8126106	GS0039
8126107	GS0078
8126108	GS0041
8126109	GS0010
8126111	GS0013
8126112	GS0014
8126113	GS0064
8126114	GS0040
8126114	GS0040
8126114	GS0111
8126118	GS0042
8126119	GS0080
8126120	GS0281
8126121	GS0457
8126121	GS0282
8126122	GS0067
8126122	GS0067
8126123	GS0068
8126125	GS0077

LIPMESA	MAGNETI MARELLI
8126126	GS0163
8126127	GS0080
8126128	GS0459
8126129	GS0372
8126130	GS0085
8126131	GS0280
8126132	GS0279
8126134	GS0463
8126138	GS0449
8127500	GS0464
8127501	GS0465
8127503	GS0199
8127503	GS0200
8127504	GS0284
8127505	GS0285
8127506	GS0284
8127506	GS0285
8127508	GS0170
8127509	GS0171
8127510	GS0172
8127511	GS0160
8127512	GS0251
8127513	GS0108
8127514	GS0146
8127517	GS0466
8127518	GS0023
8127519	GS0140
8127520	GS0141
8127521	GS0142
8127522	GS0146
8127524	GS0125
8127525	GS0174
8127527	GS0330
8127527	GS0330
8127529	GS0602
8127531	GS0109
8127532	GS0603
8127533	GS0383
8127533	GS0383
8127534	GS0079
8127534	GS0079
8127535	GS0252
8127536	GS0605
8127537	GS0292

LIPMESA	MAGNETI MARELLI
8127538	GS0293
8127539	GS0135
8127541	GS0146
8127542	GS0289
8127542	GS0289
8127543	GS0423
8127544	GS0421
8127545	GS0075
8127546	GS0393
8127546	GS0393
8127547	GS0223
8127548	GS0167
8127549	GS0126
8127550	GS0503
8127551	GS0230
8127551	GS0232
8127551	GS0231
8127552	GS0369
8127553	GS0515
8127554	GS0467
8127554	GS0468
8127555	GS0288
8127556	GS0205
8127556	GS0206
8127557	GS0407
8135712	GS0399
8135718	GS0121
8135721	GS0558
8135722	GS0366
8135723	GS0390
8135725	GS0509
8135725	GS0191
8137200	GS0156
8137207	GS0295
8147000	GS0024
8147000	GS0024
8147000	GS0024
8147000	GS0024
8147000	GS0024
8147000	GS0024
8147000	GS0024
8148400	GS0608
8148401	GS0589
8148401	GS0138

LIPMESA	MAGNETI MARELLI
8156800	GS0185
8156800	GS0186
8156801	GS0305
8156803	GS0612
8156803	GS0613
8156803	GS0327
8156803	GS0327
8156803	GS0326
8156803	GS0326
8156805	GS0469
8156806	GS0569
8156807	GS0568
8158506	GS0443
8158705	GS0173
8159200	GS0570
8159201	GS0350
8159201	GS0350
8159202	GS0277
8159203	GS0579
8159215	GS0349
8162004	GS0525
8162005	GS0526
8162006	GS0315
8162007	GS0580
8162008	GS0415
8162012	GS0403
8162016	GS0572
8162017	GS0573
8162031	GS0574
8163400	GS0384
8163400	GS0384
8163401	GS0389
8163401	GS0389
8163402	GS0385
8163402	GS0385
8163403	GS0076
8163403	GS0076
8163403	GS0076
8163404	GS0155
8163404	GS0155
8163404	GS0155
8163405	GS0124
8163405	GS0124
8163406	GS0363

LIPMESA	MAGNETI MARELLI
8163406	GS0363
8163407	GS0577
8163408	GS0528
8163409	GS0241
8163409	GS0241
8163410	GS0053
8163410	GS0053
8163411	GS0143
8163411	GS0143
8163417	GS0242
8163417	GS0242
8163418	GS0031
8163418	GS0031
8163419	GS0243
8163419	GS0243
8163422	GS0401
8163423	GS0401
8163424	GS0402
8163425	GS0402
8163426	GS0209
8163426	GS0209
8163427	GS0102
8163427	GS0102
8163428	GS0392
8163428	GS0392
8163429	GS0032
8163429	GS0032
8163430	GS0257
8163430	GS0257
8163432	GS0081
8163432	GS0081
8163435	GS0165
8163435	GS0165
8163436	GS0137
8163436	GS0137
8163437	GS0416
8163440	GS0364
8163440	GS0364
8163442	GS0136
8163442	GS0136
8163443	GS0119
8163443	GS0119
8163444	GS0087
8163444	GS0087

LIPMESA	MAGNETI MARELLI
8163445	GS0088
8163445	GS0088
8163448	GS0362
8163448	GS0362
8163449	GS0361
8163449	GS0361
8163450	GS0337
8163450	GS0337
8163452	GS0517
8166701	GS0132
8166702	GS0020
8166704	GS0620
8166705	GS0360
8166706	GS0147
8166709	GS0201
8166710	GS0324
8166711	GS0418
8166712	GS0066
8166714	GS0617
8166715	GS0309
8166717	GS0178
8166719	GS0317
8166720	GS0314
8166720	GS0145
8166721	GS0133
8166723	GS0424
8166724	GS0455
8166725	GS0457
8166726	GS0456
8166727	GS0112
8166728	GS0321
8166729	GS0470
8166730	GS0159
8166731	GS0417
8166732	GS0354
8168700	GS0587
8169701	GS0586
8172900	GS0021
8172901	GS0623
8172905	GS0004
8172906	GS0092
8172907	GS0318
8172908	GS0621
8172908	GS0329

LIPMESA	MAGNETI MARELLI
8172909	GS0253
8172910	GS0543
8172910	GS0544
8172910	GS0278
8172912	GS0255
8172913	GS0624
8172914	GS0378
8172915	GS0130
8172916	GS0527
8172917	GS0240
8172918	GS0311
8172919	GS0312
8172920	GS0227
8172920	GS0228
8172920	GS0228
8172921	GS0157
8172922	GS0151
8172922	GS0151
8172922	GS0129
8172922	GS0129
8172922	GS0129
8172923	GS0093
8172924	GS0552
8172925	GS0127
8172925	GS0127
8172926	GS0188
8172927	GS0475
8172927	GS0433
8172928	GS0189
8172929	GS0211
8175702	GS0191
8175703	GS0627
8175704	GS0334
8175705	GS0379
8175706	GS0379
8175707	GS0207
8175707	GS0208
8175708	GS0358
8175712	GS0426
8175712	GS0426
8175715	GS0443
8175715	GS0479
8177800	GS0604
8177801	GS0628

LIPMESA	MAGNETI MARELLI
8177802	GS0394
8177803	GS0395
8177804	GS0499
8177805	GS0500
8177806	GS0495
8177807	GS0497
8177808	GS0496
8177809	GS0556
8177810	GS0498
8177811	GS0396
8177812	GS0370
8177813	GS0557
8177814	GS0630
8182900	GS0062
8182901	GS0139
8182902	GS0123
8182903	GS0022
8182904	GS0126
8182905	GS0283
8182906	GS0099
8182907	GS0258
8182908	GS0179
8182909	GS0632
8182910	GS0016
8182911	GS0192
8185700	GS0047
8185700	GS0060
8185700	GS0047
8185700	GS0060
8185701	GS0056
8185702	GS0047
8185702	GS0060
8185703	GS0216
8185704	GS0044
8185705	GS0173
8186000	GS0633
8188900	GS0581
8188901	GS0581
8188906	GS0091
8188907	GS0090
8192532	GS0584
8192533	GS0584
8192541	GS0487
8192546	GS0486

LIPMESA	MAGNETI MARELLI
8192550	GS0634
8195000	GS0563
8195001	GS0564
8195002	GS0072
8195003	GS0565
8195004	GS0038
8195005	GS0048
8195006	GS0190
8195011	GS0122
8195012	GS0122
8195014	GS0637
8195015	GS0637
8195016	GS0175
8195017	GS0176
8195022	GS0105
8195023	GS0244
8195024	GS0245
8195025	GS0117
8195026	GS0248
8195027	GS0225
8195029	GS0105
8195030	GS0126
8195030	GS0126
8195031	GS0144
8195031	GS0144
8195033	GS0183
8195033	GS0131
8195033	GS0131
8195035	GS0134
8195037	GS0323
8195038	GS0134
8195039	GS0131
8195040	GS0260
8195041	GS0198
8195041	GS0198
8195042	GS0062
8195043	GS0099
8195044	GS0131
8195046	GS0566
8195807	GS0635
8195808	GS0562
8195809	GS0562
8195810	GS0510
8195813	GS0310

LIPMESA	MAGNETI MARELLI
8195813	GS0310
8195813	GS0310
8195813	GS0310
8195816	GS0529
8195817	GS0343
8195818	GS0344
8195818	GS0344
8195818	GS0344
8195819	GS0153
8195821	GS0182
8195824	GS0490
8195826	GS0482
8066702 (combi)	GS0266
8108405 (L)	GS0522
8108406 (P)	GS0522
8162025 (P)	GS0571
8162026 (L)	GS0571
8163438 (L)	GS0516
8163439 (P)	GS0516
8172904 (not sportversion)	GS0308
8172911 (sport version)	GS0308

QUINTON HAZELL	MAGNETI MARELLI
128125	GS0972
128178	GS0879
128182	GS0786
128295	GS0898
128328	GS0744
128331	GS0899
128363	GS0787
128449	GS0901
128623	GS0742
128661	GS0936
128670	GS0994
128675	GS0847
128680	GS0839
128698	GS0968
128721	GS0933
128759	GS0795
128772	GS0768
128783	GS0947
128786	GS0880
128821	GS0930
128890	GS0793
128890	GS0809
128891	GS0794
128893	GS0877
128895	GS0854
128896	GS0891
128896	GS0891
128902	GS0810
128903	GS0802
128904	GS0897
128905	GS0801
128910	GS0734
128911	GS0882
128917	GS0777
128918	GS0748
128919	GS0749
128920	GS0825
128922	GS0831
128924	GS0835
128925	GS0754
128928	GS0756
128929	GS0759
128930	GS0843
128931	GS0830

QUINTON HAZELL	MAGNETI MARELLI
128934	GS0949
128938	GS0792
128939	GS0886
128940	GS0765
128960	GS0874
140125	GS0751
140128	GS0740
140169	GS0739
140175	GS0750
140182	GS0924
140224	GS0905
140225	GS0906
140228	GS0912
140229	GS0911
140329	GS0881
840132	GS0977
840134	GS0989
840251	GS0978
840270	GS1001
8108421	GS0757

STABILUS	MAGNETI MARELLI
000920	GS0883
001812	GS0871
001825	GS0871
001984	GS0793
002001	GS0794
002429	GS0867
002431	GS0866
002578	GS0683
0046SJ	GS0769
006941	GS0826
006950	GS0953
006954	GS0824
006957	GS0827
006963	GS0828
011499	GS0758
011532	GS1043
011573	GS0733
011591	GS0847
011591	GS0889
012111	GS0768
012124	GS0849
012144	GS0729
012148	GS0850
012180	GS0769
012815	GS0821
012815	GS0822
013177	GS0855
013177	GS0941
013349	GS0782
013600	GS0779
013621	GS1030
013647	GS0706
013902	GS1009
014148	GS0774
014169	GS0778
014232	GS0954
015356	GS0923
015487	GS0842
015488	GS1040
015491	GS0731
015495	GS0765
015513	GS0959
015523	GS0957
015523	GS0958

STABILUS	MAGNETI MARELLI
015526	GS0958
015531	GS1001
016501	GS1009
016543	GS0725
016687	GS0841
016723	GS0956
016761	GS0831
016767	GS0809
016797	GS0737
016823	GS0896
016943	GS0730
016980	GS1008
016990	GS0829
017120	GS1002
017203	GS0732
017353	GS0859
017359	GS0894
017448	GS0920
017451	GS0687
017510	GS0801
017609	GS0724
017681	GS0897
017688	GS1007
017706	GS0844
017918	GS0730
017971	GS1039
017998	GS0802
018006	GS0748
018254	GS0767
018329	GS0823
018329	GS0823
018382	GS0830
018471	GS0900
018494	GS0852
018613	GS0723
018629	GS0834
018816	GS0753
019830	GS0969
019830	GS0813
020534	GS0926
020625	GS0925
020878	GS0811
020890	GS0857
022244	GS0762

STABILUS	MAGNETI MARELLI
022244	GS0762
022528	GS0921
022619	GS0692
022620	GS0938
022657	GS0860
022869	GS0690
022885	GS0961
023093	GS0691
023140	GS0763
023173	GS0764
023216	GS1017
023234	GS0678
023241	GS0763
023241	GS0763
023619	GS1012
023713	GS0815
023812	GS0674
023895	GS0916
023902	GS0833
023904	GS0819
024013	GS0908
024029	GS0818
024073	GS0917
024099	GS0843
024195	GS0840
024263	GS0977
024284	GS1015
024295	GS0805
024339	GS0744
024409	GS0806
024452	GS0965
024473	GS0689
024477	GS0999
024485	GS0994
024559	GS0812
0261QQ	GS0671
0262QL	GS0671
026825	GS0753
026825	GS0796
027817	GS0930
0288RT	GS0864
030656	GS0838
030681	GS0837
030769	GS0789

STABILUS	MAGNETI MARELLI
030787	GS0700
031030	GS0929
031049	GS0836
031139	GS0746
031370	GS0727
0316QO	GS0865
031779	GS0848
031997	GS0862
0319VG	GS0765
0321VN	GS0765
032275	GS0903
032455	GS1045
032492	GS1011
032547	GS0781
0325VU	GS0765
032622	GS0770
0326VP	GS0765
032724	GS0785
032963	GS0701
033064	GS0726
033317	GS0853
033418	GS0747
033465	GS0878
033769	GS0807
033844	GS0680
033948	GS0673
034075	GS0902
034096	GS0804
034491	GS1034
034753	GS0895
034928	GS0708
034928	GS0951
035075	GS0945
0421NL	GS0737
042782	GS0952
043738	GS0905
0438NY	GS0874
043977	GS0906
0442NV	GS0874
0482RI	GS0839
0552TL	GS0851
0596PK	GS1000
0681VK	GS0670
0685VR	GS0757

STABILUS	MAGNETI MARELLI
0698WT	GS0699
0704VJ	GS0963
0707VV	GS0761
0712PK	GS0735
0744VM	GS0759
0744VV	GS0671
0751VV	GS0786
0752VQ	GS0734
0756VX	GS0787
0759VI	GS0882
0763VF	GS0669
0772VE	GS0835
0789PO	GS0825
0869SH	GS1023
0872NC	GS0936
0885SP	GS0962
0895QR	GS0771
093380	GS0940
0933SV	GS0768
0953VY	GS0870
0955QH	GS0880
0974DZ	GS0955
0999MG	GS0740
0999RN	GS0893
1035VA	GS0943
1036VW	GS0756
1041VO	GS0754
1043AX	GS0968
1047VL	GS0829
105194	GS0840
105672	GS1014
1057VF	GS0829
105911	GS1013
106389	GS0681
107345	GS0688
109735	GS0909
1114WG	GS0815
1121FC	GS0990
113559	GS0686
1154PK	GS0944
1169PG	GS0935
1194SB	GS0810
1232VB	GS0841
123804	GS0715

STABILUS	MAGNETI MARELLI
1242VW	GS0841
127628	GS0709
1277PD	GS0776
129572	GS0861
1358RW	GS0762
1358RW	GS0762
1376673	GS0851
138383	GS0704
138654	GS0817
140088	GS0856
141522	GS0820
146748	GS0745
1494RL	GS1010
1501RT	GS0825
151560	GS0842
1516RP	GS0773
1517RK	GS0777
1518QJ	GS0886
153440	GS0716
1567RH	GS0787
1568TV	GS0759
167573	GS0663
167812	GS0928
1757VK	GS0783
1758VF	GS0783
1765QH	GS0765
1773MA	GS0664
1796BR	GS0991
1800BN	GS0992
1873TT	GS0868
1913YB	GS0767
195026	GS0712
2038YT	GS0819
2065BA	GS0989
220631	GS0918
2266UN	GS0933
2275TQ	GS0788
2291TY	GS0810
2315TS	GS0815
239002	GS1020
239958	GS0967
2435QL	GS0765
2445FW	GS0957
2445FW	GS0958

STABILUS	MAGNETI MARELLI
2446YW	GS0948
2449RI	GS0889
2449RI	GS0847
2524BV	GS0998
2561WJ	GS0736
2571WD	GS0877
2574WP	GS0893
2576WF	GS0927
2584WJ	GS0854
2586XW	GS0812
2616BK	GS0971
2699UG	GS0810
2705RE	GS0865
274167	GS0682
274406	GS0676
276557	GS0836
2827RC	GS0787
286324	GS0881
2864UI	GS0845
292257	GS0742
2937ZL	GS0900
3011XI	GS0900
308105	GS0698
3121TL	GS0813
3161YV	GS0874
3168YN	GS0874
3216KV	GS1024
3216KV	GS1025
3261XS	GS0882
3269YB	GS1022
3293UH	GS0729
3309RE	GS0830
3348SI	GS0823
3348SI	GS0823
3348SI	GS0823
3354SW	GS0823
3401UZ	GS0793
3402UU	GS0793
341298	GS0913
341452	GS0960
3466PL	GS0754
348944	GS0703
3489US	GS0871
3493UP	GS0871

STABILUS	MAGNETI MARELLI
3592SV	GS0891
3658XP	GS0752
3749WN	GS0874
3781WC	GS0874
3789WQ	GS0874
3796WZ	GS0874
385302	GS0790
3937AM	GS0675
395340	GS1037
3987SB	GS0753
3987SB	GS0797
3995SF	GS0753
4012LQ	GS0756
4044WZ	GS0784
4045WU	GS0784
4081FD	GS0743
4126XQ	GS0671
416372	GS0791
4249RG	GS0835
425693	GS0697
437135	GS1041
437484	GS0931
4495VU	GS0784
450189	GS0924
450788	GS0679
4546NQ	GS0834
4711UR	GS0831
4751SB	GS0854
4756UW	GS0844
4927UV	GS0753
498588	GS0958
499783	GS0939
499783	GS0997
5001ZR	GS0803
5011ZL	GS0810
501695	GS0800
5126VQ	GS0765
5132VD	GS0765
5253VG	GS0765
5262VF	GS0765
5279QL	GS0832
5353SL	GS0854
5354SG	GS0864
5414ZW	GS0806

STABILUS	MAGNETI MARELLI
5424QZ	GS0794
5427ZB	GS0803
5435ZF	GS0805
5449ZG	GS0811
5537SQ	GS0769
5538SL	GS0768
5725ZR	GS0851
5754UY	GS0757
5768ZF	GS0750
5783VH	GS0851
5806SS	GS0893
5836DG	GS1038
5904QC	GS0714
5905QY	GS0888
5913QB	GS0879
593440	GS0985
6022MR	GS0970
611843	GS1027
611844	GS1027
6124QL	GS0753
6124QL	GS0798
6181SJ	GS0858
619016	GS0914
622601	GS0919
6252QX	GS0738
627141	GS1004
6345QH	GS0882
6362LD	GS0901
6371SB	GS0847
6371SB	GS0889
6415VW	GS0789
643869	GS1042
643870	GS1042
6492TA	GS0793
6553VE	GS0872
6556YE	GS0849
6559YQ	GS0849
6583WJ	GS0765
6584WE	GS0765
6591WN	GS0671
6615PI	GS0891
6624PH	GS0891
6631VT	GS0933
6711TF	GS0983

STABILUS	MAGNETI MARELLI
6843RF	GS0839
6886YT	GS0792
6927TJ	GS0882
6952TQ	GS0755
7041MC	GS0852
7042MY	GS0852
7043MT	GS0852
705084	GS0685
705084	GS1044
7098VJ	GS0891
713210	GS0722
7167YN	GS0850
7168YI	GS0850
720826	GS0728
726084	GS0915
732061	GS1021
732300	GS0699
732778	GS0988
734688	GS0987
735408	GS0820
7373RO	GS0765
7377TN	GS0775
7378RQ	GS0765
7378TI	GS0772
7385RZ	GS0765
7388RK	GS0765
7456RE	GS0795
7642VA	GS0934
7734WM	GS0840
777230	GS0677
7818TJ	GS0758
7824VP	GS0870
7825VK	GS0788
7865TV	GS0891
7998TI	GS0761
8014RE	GS1003
8082YZ	GS0946
8104245	GS0937
817385	GS0693
818341	GS0695
819297	GS0694
820014	GS0717
8205TK	GS0829
8218TQ	GS0829

STABILUS	MAGNETI MARELLI
8339BK	GS0898
844392	GS0710
8467UA	GS0865
8468UW	GS0876
8482TR	GS0795
8487UP	GS0864
8487UP	GS0863
8491UM	GS1005
8498UE	GS0863
852518	GS0711
853474	GS0719
8539UB	GS0869
8541UI	GS0868
8542UD	GS0976
8551UC	GS0873
8552UY	GS1006
859486	GS0890
8613YU	GS0892
8628YQ	GS0993
8637YP	GS0872
867843	GS0799
8704YO	GS0842
870950	GS1019
870951	GS1019
8711TQ	GS0844
8715YD	GS0842
873072	GS0705
875221	GS0702
8771TH	GS0830
883589	GS0995
884302	GS1016
8927UQ	GS0975
8985BM	GS0899
8986TQ	GS0865
9005XA	GS0875
9006XW	GS0875
907517	GS0721
9082XV	GS1031
9084XL	GS1031
9106RM	GS0869
911786	GS0859
9153KZ	GS0876
917077	GS0684
920662	GS0887

STABILUS	MAGNETI MARELLI
9213WV	GS0839
9219XO	GS0795
9228UZ	GS0892
9262QU	GS0847
9262QU	GS0889
9262UE	GS0875
9267UG	GS0875
9288TU	GS0794
931146	GS0780
931147	GS0780
931148	GS0780
9338XA	GS0839
9341XC	GS0947
9349XQ	GS0882
9351XX	GS0789
9378KB	GS0974
9391KY	GS0979
946919	GS1018
9494KC	GS0739
952449	GS0713
9568UH	GS0811
9572UE	GS0811
959347	GS0816
9618PX	GS0765
9632TZ	GS0803
9639UN	GS0878
9669ZC	GS0755
9714UQ	GS0842
9716UG	GS0842
9767FE	GS0751
9914WV	GS0874

ITALY
Viale Aldo Borletti, 61/63
20011 Corbetta (Milano)
Tel. +39 02 972 27 400 • Fax +39 02 97227234

Export
Viale Aldo Borletti, 61/63
20011 Corbetta (Milano) Italy
Tel. +39 02 97227618 • Fax +39 02 97227755

SPAIN
Polígono Industrial G-2 Collsabadell
Ronda de Collsabadell, 1-3
08450, Llinars del Vallčs, BCN
Tel. +34 93 8413530 • Fax +34 93 8427257

FRANCE
Z.A. Trappes Elancourt
5-7 rue Albert Einstein - 78190 Trappes
tel +33 (0)1 3016 6960 - Fax +33 (0)1 3016 6961

GERMANY
Wannenäckerstrasse 71
74078 Heilbronn
Tel. +49 7131 2910 • Fax +49 7131 165236

POLAND
Plac pod Lipami 5
40-476 Katowice
Tel. +48 32 6036107 • Fax +48 32 6036108

BRAZIL
Rua Manoel da Nóbrega, 350
09380-120 Mauá-São Paulo
Tel. +55 11 2144-1717 • Fax +55 11 2144-1688

ARGENTINA
R. Andonaegui 1035
(C1427BEC) Capital Federal-Buenos Aires
Tel. +54 11 45236612 • Fax +54 11 45236613

Available on the App Store

YouTube

Magneti Marelli After Market Parts and Services S.p.A.
Viale Aldo Borletti, 61/63
20011 Corbetta (Milano)
Tel. +39 02 972 27 400 • Fax +39 02 972 27 234
www.magnetimarelli-checkstar.com

8 435034 945973

07-12 099996781206
Copyright Magneti Marelli After Market Parts and Services S.p.A. 2012

Molle a gas, Gas springs, Gasfedern, Vérins de Hayons, Resortes de gas, Molas de gás, Αμορτισέρ μπαγκάζ, Sprężyny gazowe, Газовые Упоры, Gazli amortisör

2012-2013

PL